NOTES:-

1. ALL DIMENSIONS AND LEVELS ARE IN METRES UNLESS OTHERWISE SPECIFIED.
2. NO DIMENSION SHOULD BE MEASURED FROM THE DRAWING.

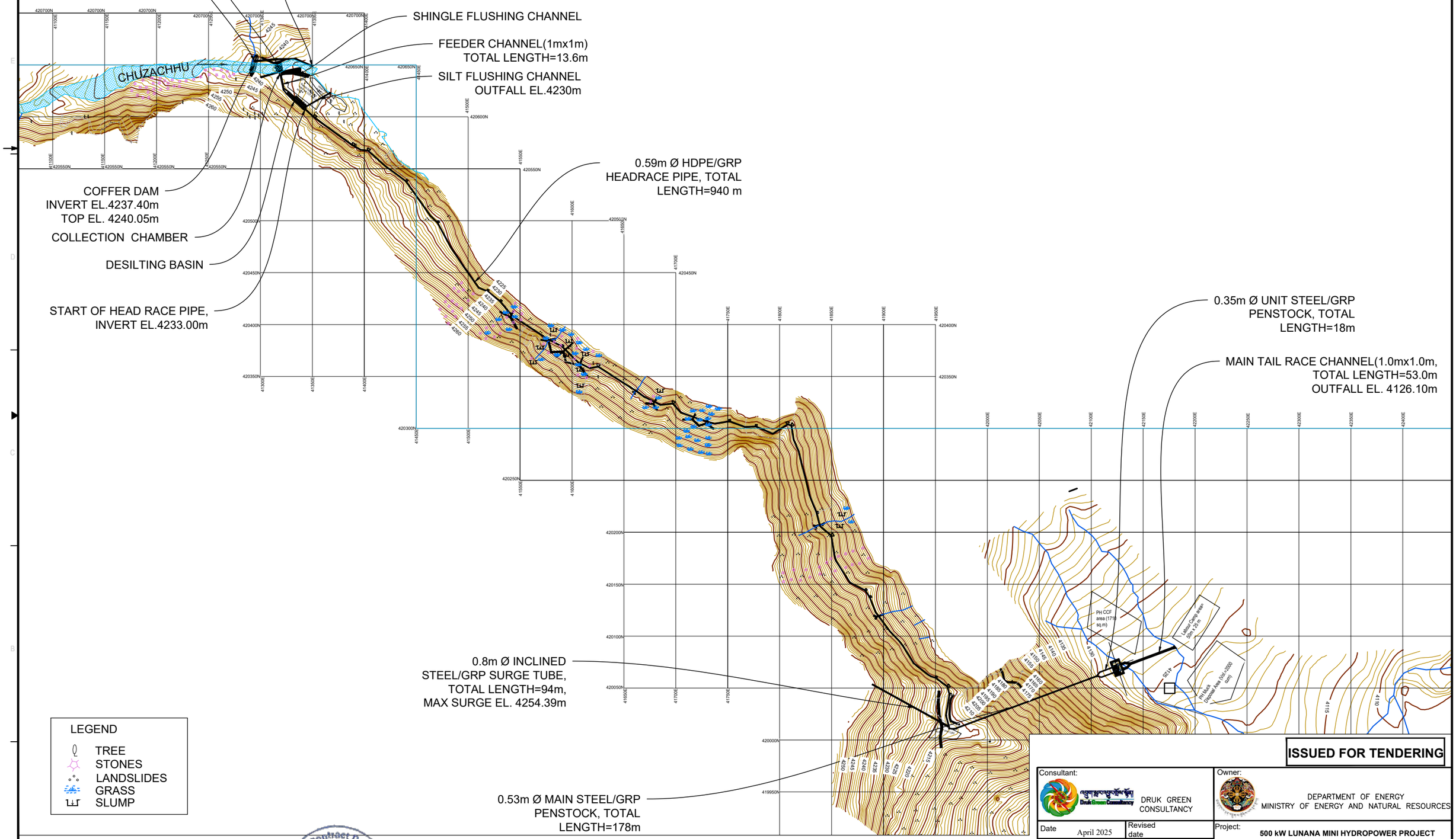

ISSUED FOR TENDERING

Consultant: DRUK GREEN CONSULTANCY	Owner: DEPARTMENT OF ENERGY, MINISTRY OF ENERGY AND NATURAL RESOURCES
Date: April 2025 / Revised date	Project: **500 kW LUNANA MINI HYDROPOWER PROJECT**, GASA, BHUTAN
Designed / Verified	Title: GENERAL PROJECT LAYOUT
Reviewed / Approved	
Drawn / Scale 1:3500	Drawing No.
THIS DRAWING IS MEANT FOR FSR NOT TO BE USED FOR CONSTRUCTION.	DGPC/DGC/LMHP/CIVIL-01 Rev. 0

Projects & Contract Department * DGPC BHUTAN * Contracts Section

Cad File No: C:\Users\t.chophel3712\Desktop\TAS 2025\Lunana Tender Drawins\Civil\dwg\luna_Updated layout_07.04.25 (1).dwg

Apr 21, 2025 - 12:56pm

NOTES:-

1. ALL DIMENSIONS AND LEVELS ARE IN METRES UNLESS OTHERWISE SPECIFIED.
2. NO DIMENSION SHOULD BE MEASURED FROM THE DRAWING.

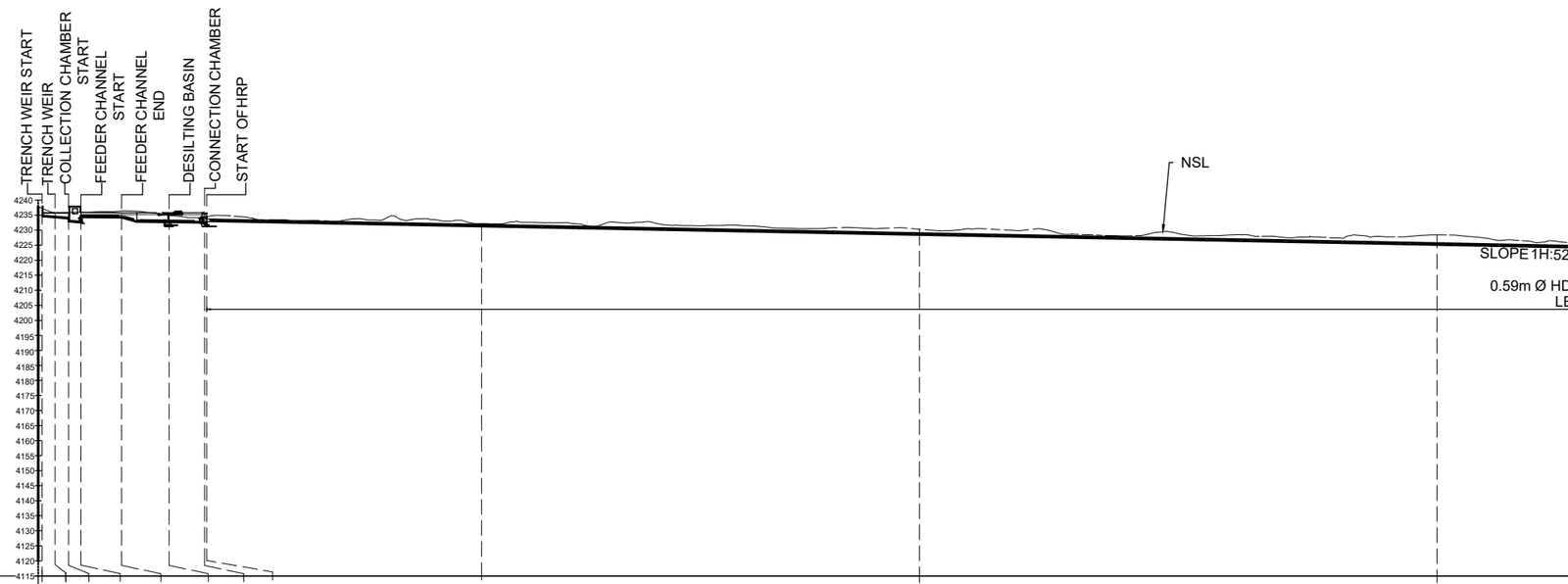

CHAINAGE(m)	0.00	4.2928	8.8000	12.900	26.450	42.247	54.041	54.772	146.29	291.98
NSL(m)	4237.27	4235.96	4235.95	4236.02	4236.42	4234.98	4234.21	4234.40	4232.23	4230.32
INVERT LEVEL(m)	4237.27	4234.67	4234.30	4234.90	4234.80	4233.25	4232.70	4233.00	4231.23	4228.42

CHAINAGE(m)	464.28	626.02	807.65	957.13	994.21	1054.49	1112.92	1167.37	1227.40	
NSL(m)	4228.42	4223.29	4219.53	4217.52	4216.98	4194.00	4152.43	4127.29	4126.22	
INVERT LEVEL(m)	4225.09	4221.97	4218.46	4215.58	4214.86	4192.29	4151.51	4126.00	4126.10	

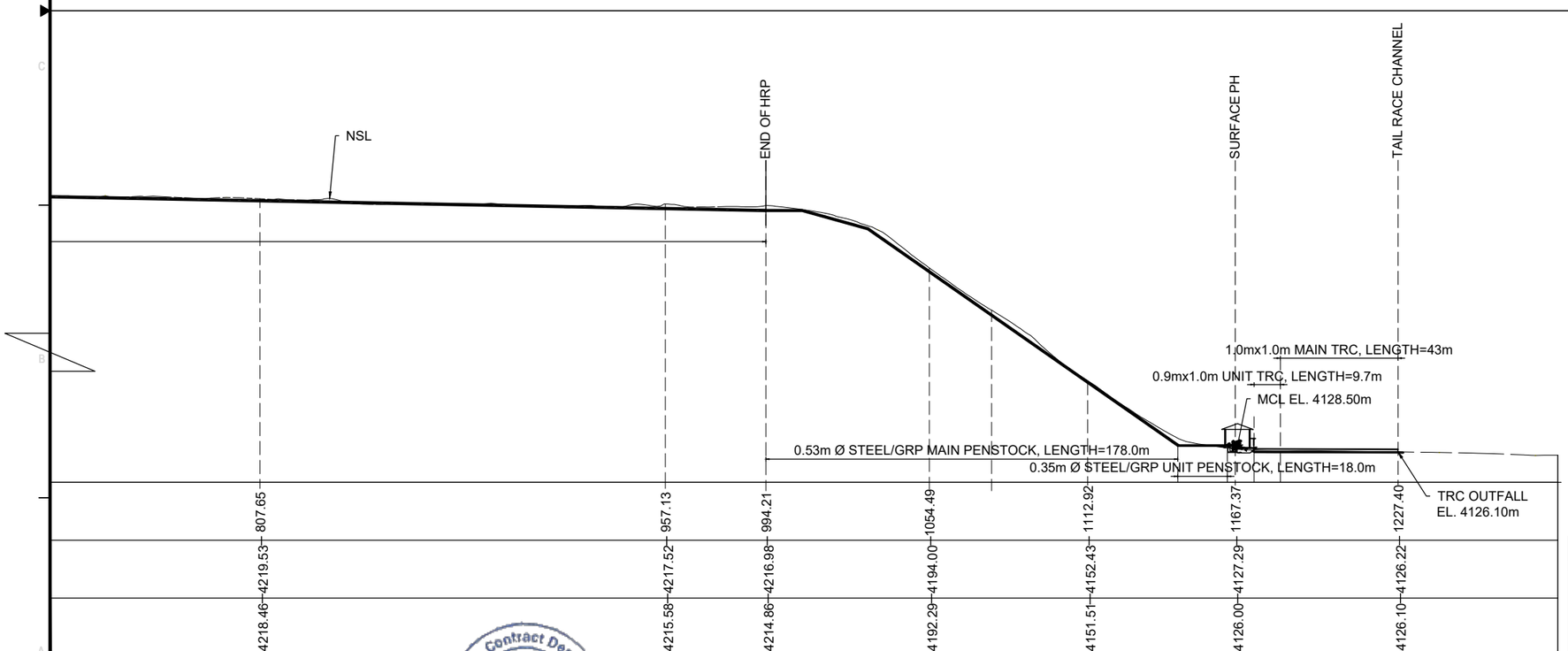

SCALE 1:2000 — 20 0 20 40 60 80 100

ISSUED FOR TENDERING

Consultant: DRUK GREEN CONSULTANCY

Owner: DEPARTMENT OF ENERGY, MINISTRY OF ENERGY AND NATURAL RESOURCES

Date April 2025	Revised date
Designed	Verified
Reviewed	Approved
Drawn	Scale 1:2000

THIS DRAWING IS MEANT FOR FSR NOT TO BE USED FOR CONSTRUCTION.

Project: **500 kW LUNANA MINI HYDROPOWER PROJECT**
GASA, BHUTAN

Title: PROJECT LONGITUDINAL PROFILE

Drawing No. DGPC/DGC/LMHP/CIVIL-02 Rev. 0

Projects & Contract Department * Contracts Section * DGPC BHUTAN

Cad File No: C:\Users\t.chophel3712\Desktop\TAS 2025\Lunana Tender Drawins\Civil\dwg\luna_Updated layout_07.04.25 (1).dwg

Apr 21, 2025 - 12:56pm

NOTES:-

1. ALL DIMENSIONS AND LEVELS ARE IN METRES UNLESS OTHERWISE SPECIFIED.
2. NO DIMENSION SHOULD BE MEASURED FROM THE DRAWING.

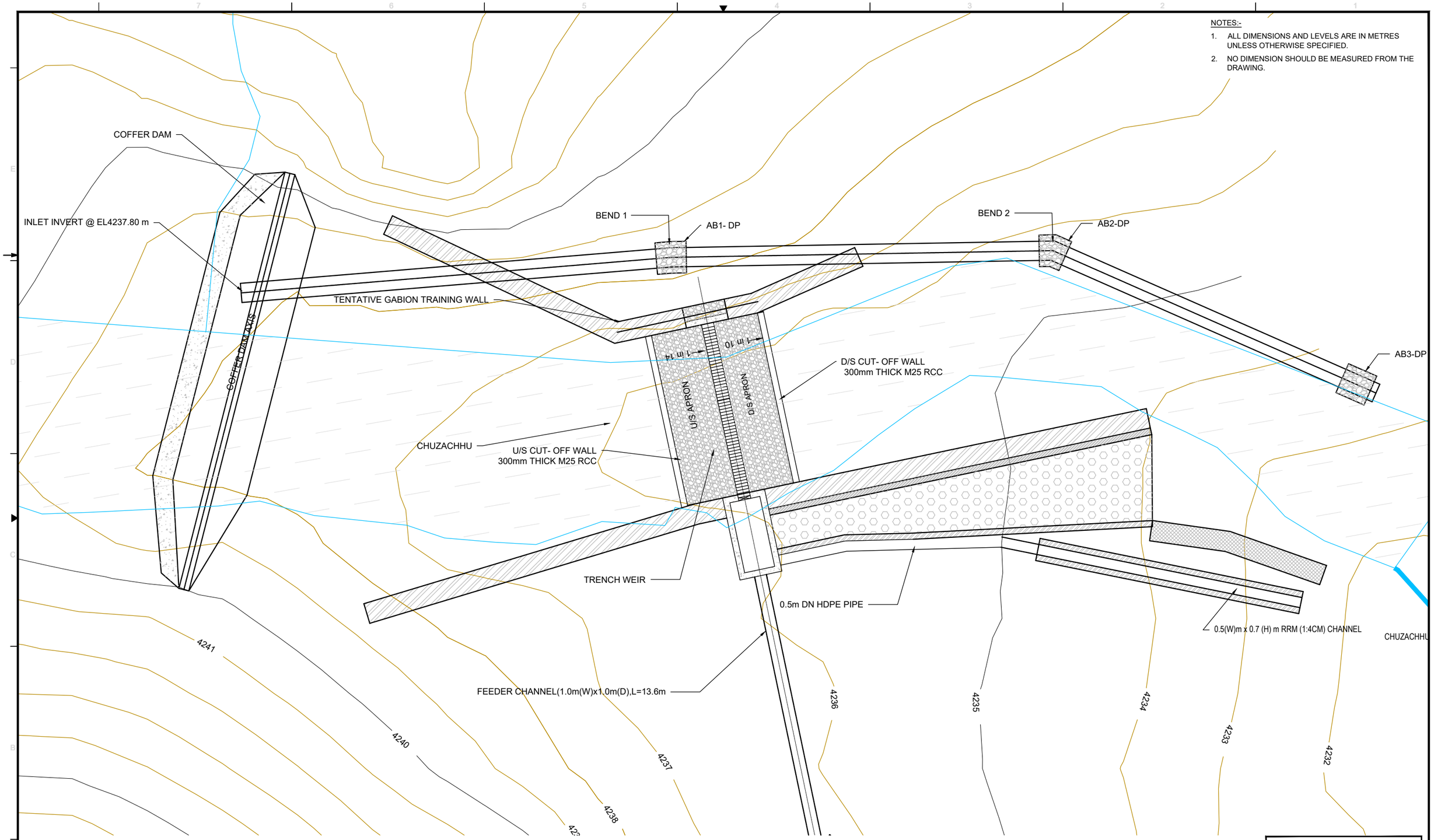

PLAN

SCALE 1:175

ISSUED FOR TENDERING

SCALE 1 : 175

1.75 0 1.75 3.5 5.25 7.0 8.75m

Projects & Contract Department * Contracts Section * DGPC BHUTAN

Consultant: DRUK GREEN CONSULTANCY	Owner: DEPARTMENT OF ENERGY, MINISTRY OF ENERGY AND NATURAL RESOURCES
Date April 2025 / Revised date	Project: **500 kW LUNANA MINI HYDROPOWER PROJECT** GASA, BHUTAN
Designed / Verified	Title: TEMPORARY DIVERSION ARRANGEMENT PLAN
Reviewed / Approved	
Drawn / Scale As Shown	Drawing No.
THIS DRAWING IS MEANT FOR FSR NOT TO BE USED FOR CONSTRUCTION.	DGPC/DGC/LMHP/CIVIL-03 Rev. 0

Cad File No: C:\Users\t.chophel3712\Desktop\TAS 2025\Lunana Tender Drawins\Civil\dwg\Temporary Diversion.dwg

Apr 21, 2025 - 1:15pm

NOTES:-

1. ALL DIMENSIONS AND LEVELS ARE IN METRES UNLESS OTHERWISE SPECIFIED.
2. NO DIMENSION SHOULD BE MEASURED FROM THE DRAWING.

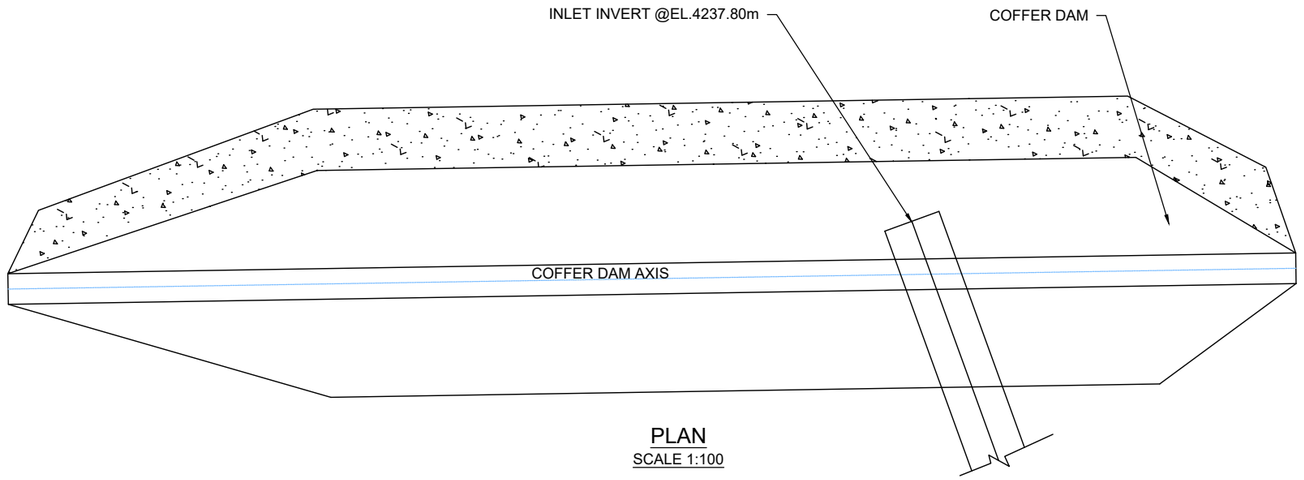

PLAN
SCALE 1:100

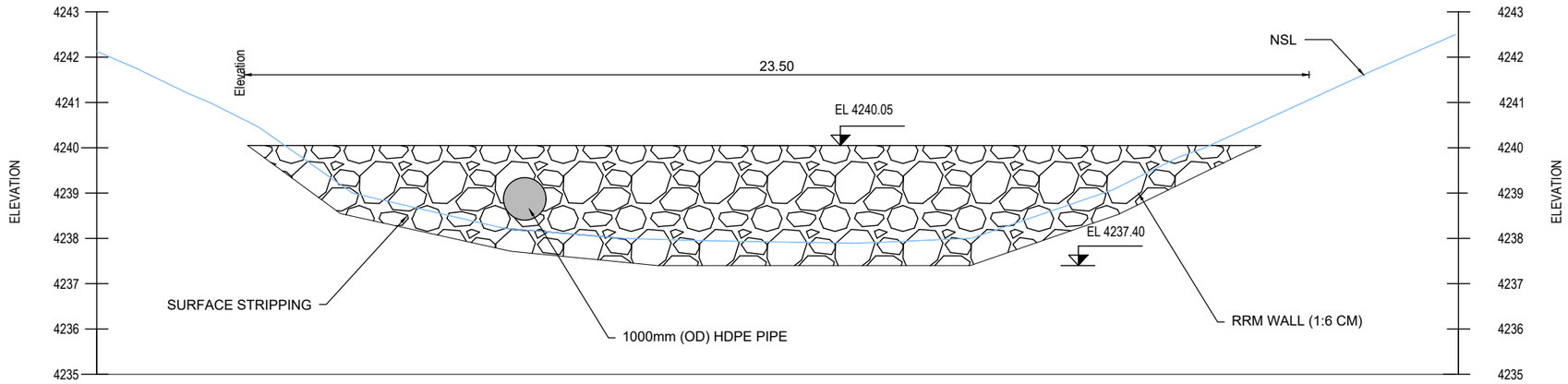

SECTION A-A
SCALE 1:125

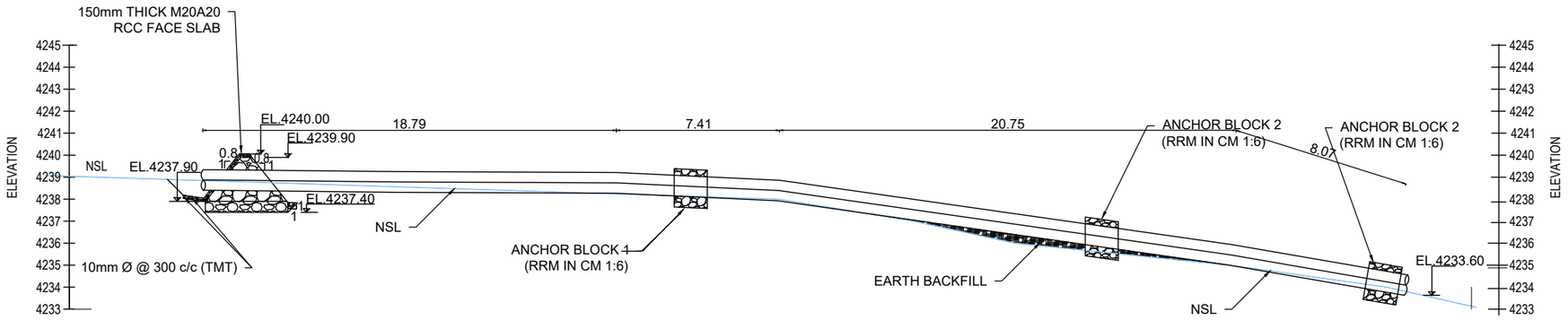

SECTION B-B
SCALE 1:250

SCALE 1 : 100 — 1.0 0 1.0 2.0 3.0 4.0 5.0m

SCALE 1 : 125 — 1.25 0 1.25 2.5 3.75 5.0 6.25m

SCALE 1 : 250 — 2.5 0 2.5 5.0 7.5 10.0 12.5m

ISSUED FOR TENDERING

Consultant: DRUK GREEN CONSULTANCY	Owner: DEPARTMENT OF ENERGY, MINISTRY OF ENERGY AND NATURAL RESOURCES
Date April 2025 / Revised date	Project: **500 kW LUNANA MINI HYDROPOWER PROJECT** GASA, BHUTAN
Designed / Verified	Title: TEMPORARY DIVERSION ARRANGEMENT SECTIONS
Reviewed / Approved	
Drawn / Scale As Shown	Drawing No.
THIS DRAWING IS MEANT FOR FSR NOT TO BE USED FOR CONSTRUCTION.	DGPC/DGC/LMHP/CIVIL-04 Rev. 0

Projects & Contract Department DGPC BHUTAN Contracts Section

Cad File No: C:\Users\t.chophel3712\Desktop\TAS 2025\Lunana Tender Drawins\Civil\dwg\Temporary Diversion.dwg

Apr 21, 2025 - 1:15pm

NOTES:-

1. ALL DIMENSIONS AND LEVELS ARE IN METRES UNLESS OTHERWISE SPECIFIED.
2. NO DIMENSION SHOULD BE MEASURED FROM THE DRAWING.

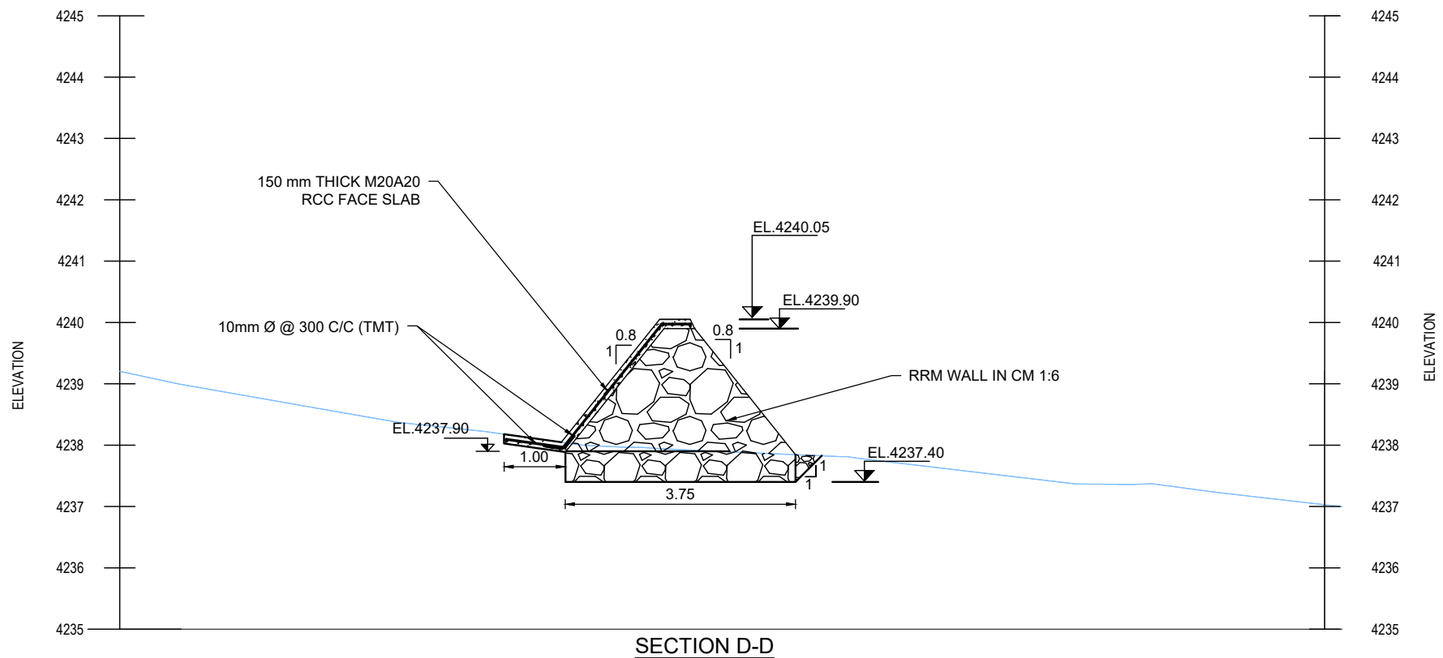

SECTION D-D

SCALE 1:100

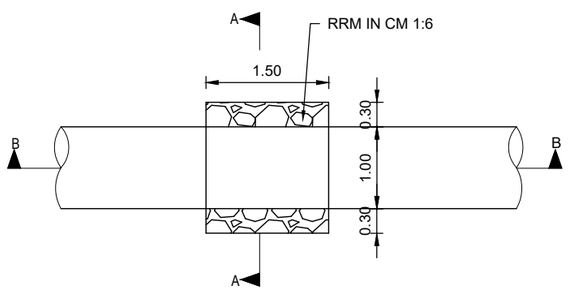

PLAN

SCALE 1:75

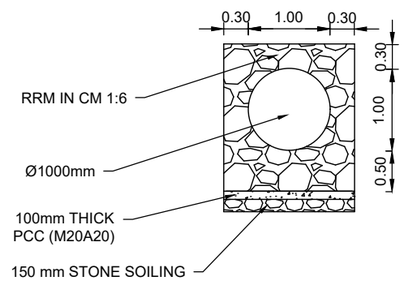

SECTION A-A

SCALE 1:75

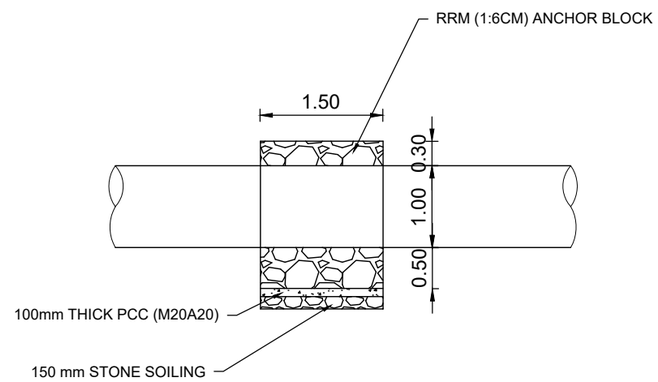

SECTION B-B

SCALE 1:75

SCALE 1 : 100 — 1.0 0 1.0 2.0 3.0 4.0 5.0m

SCALE 1 : 75 — 7.5 0 7.5 15.0 22.5 30.0 37.5cm

SCALE 1 : 75 — 7.5 0 7.5 15.0 22.5 30.0 37.5cm

SCALE 1 : 75 — 7.5 0 7.5 15.0 22.5 30.0 37.5cm

Projects & Contract Department * Contracts Section * DGPC BHUTAN

ISSUED FOR TENDERING

Consultant: DRUK GREEN CONSULTANCY		Owner: DEPARTMENT OF ENERGY, MINISTRY OF ENERGY AND NATURAL RESOURCES	
Date April 2025	Revised date	Project: **500 kW LUNANA MINI HYDROPOWER PROJECT** GASA, BHUTAN	
Designed	Verified	Title: TEMPORARY DIVERSION ARRANGEMENT SECTIONS	
Reviewed	Approved		
Drawn	Scale As Shown	Drawing No.	
THIS DRAWING IS MEANT FOR FSR NOT TO BE USED FOR CONSTRUCTION.		DGPC/DGC/LMHP/CIVIL-05	Rev. 0

Cad File No: C:\Users\t.chophel3712\Desktop\TAS 2025\Lunana Tender Drawins\Civil\dwg\Temporary Diversion.dwg

Apr 21, 2025 - 1:15pm

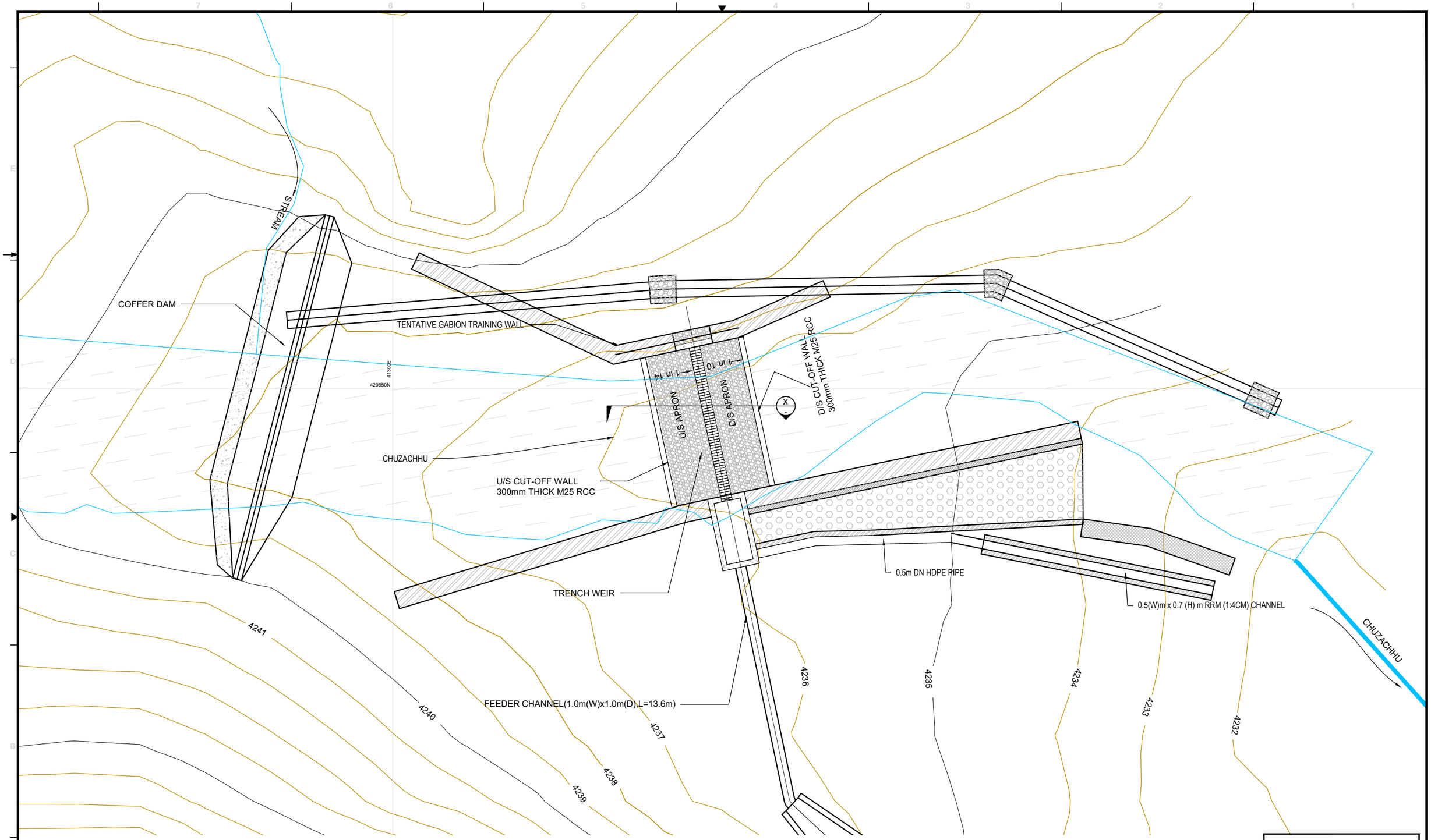

ISSUED FOR TENDERING

TRENCH WEIR PLAN

SCALE 1:200

NOTES:-

1. ALL DIMENSIONS AND LEVELS ARE IN METRES UNLESS OTHERWISE SPECIFIED.
2. NO DIMENSION SHOULD BE MEASURED FROM THE DRAWING.

SCALE 1 : 200

2.0 0 2.0 4.0 6.0 8.0 10.0m

Projects & Contract Department * Contracts Section * DGPC BHUTAN

Consultant: DRUK GREEN CONSULTANCY		Owner: DEPARTMENT OF ENERGY, MINISTRY OF ENERGY AND NATURAL RESOURCES	
Date April 2025	Revised date	Project: **500 kW LUNANA MINI HYDROPOWER PROJECT** GASA, BHUTAN	
Designed	Verified	Title: TRENCH WEIR LAYOUT PLAN	
Reviewed	Approved		
Drawn	Scale AS SHOWN	Drawing No.	
THIS DRAWING IS MEANT FOR FSR NOT TO BE USED FOR CONSTRUCTION.		DGPC/DGC/LMHP/CIVIL-06	Rev.

Cad File No: C:\Users\t.chophel3712\Desktop\TAS 2025\Lunana Tender Drawings\Civil\dwg\Trench weir Plan and section, HRP, Cross Drainage & Dry wall section (1).dwg

Apr 21, 2025 - 12:48pm

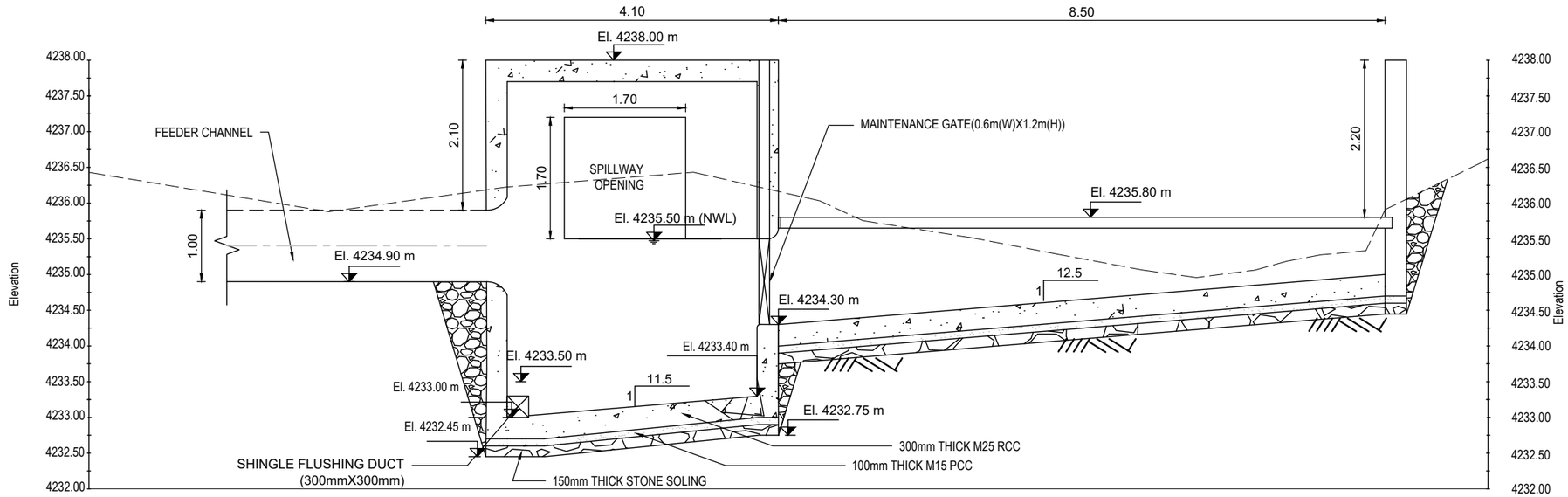

L- SECTION

SCALE 1:75

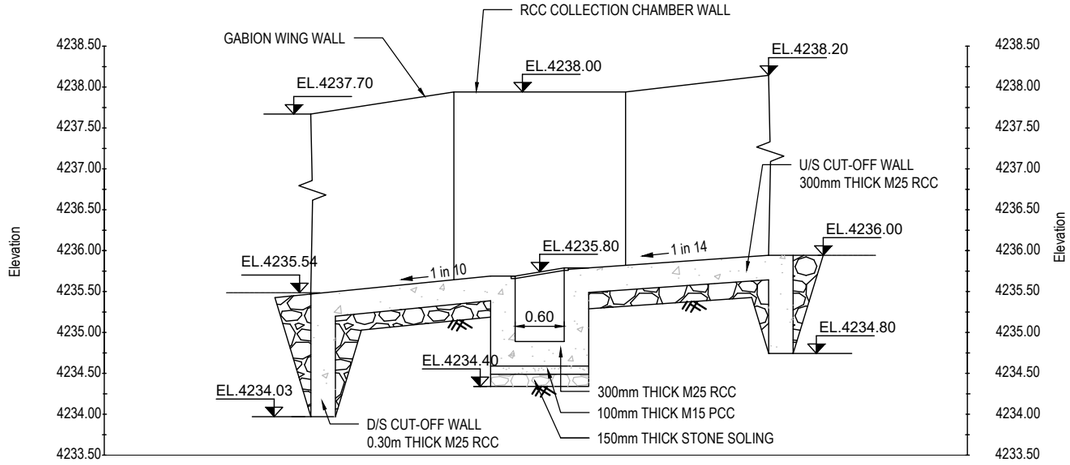

X-SECTION

SCALE 1:75

NOTES:-

1. ALL DIMENSIONS AND LEVELS ARE IN METRES UNLESS OTHERWISE SPECIFIED.
2. NO DIMENSION SHOULD BE MEASURED FROM THE DRAWING.

SCALE 1 : 75

7.5 0 7.5 15.0 22.5 30.0 37.5cm

ISSUED FOR TENDERING

Consultant: DRUK GREEN CONSULTANCY		Owner: DEPARTMENT OF ENERGY, MINISTRY OF ENERGY AND NATURAL RESOURCES
Date April 2025	Revised date	Project: **500 kW LUNANA MINI HYDROPOWER PROJECT** GASA, BHUTAN
Designed	Verified	Title: TRENCH WEIR SECTIONS
Reviewed	Approved	
Drawn	Scale AS SHOWN	Drawing No.
THIS DRAWING IS MEANT FOR FSR NOT TO BE USED FOR CONSTRUCTION.		DGPC/DGC/LMHP/CIVIL-07 Rev.

Projects & Contract Department * Contracts Section * DGPC BHUTAN

Cad File No: C:\Users\t.chephel3712\Desktop\TAS 2025\Lunana Tender Drawins\Civil\dwg\Trench weir Plan and section, HRP, Cross Drainage & Dry wall section (1).dwg

Apr 21, 2025 - 12:48pm

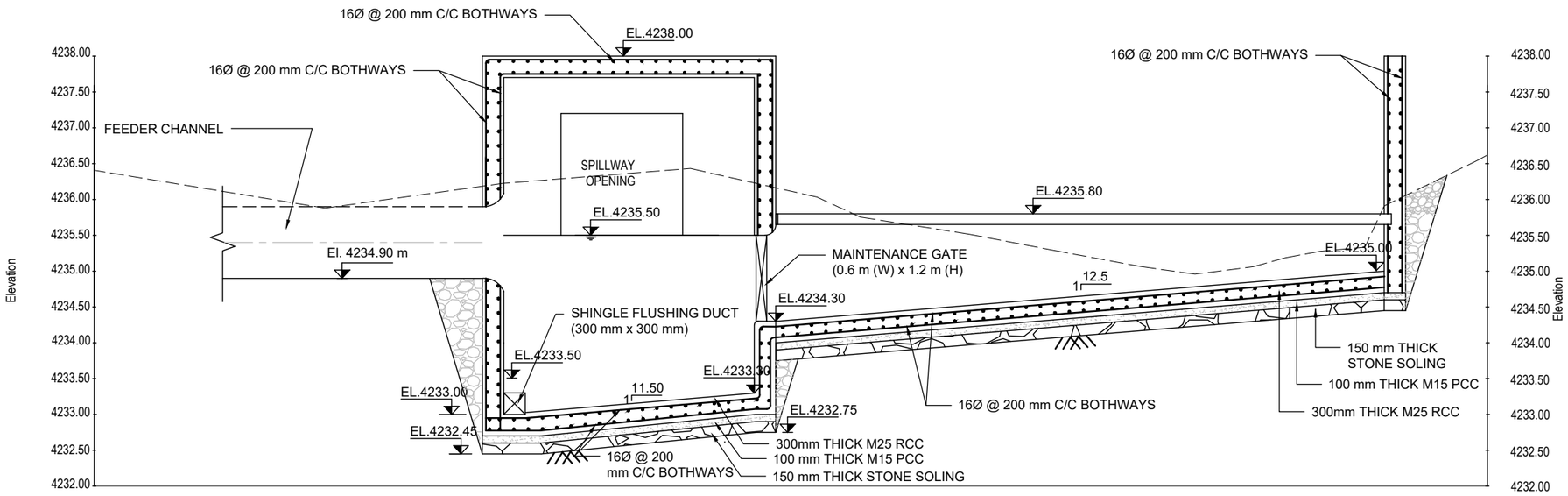

L- SECTION-STRUCTURAL DETAIL

SCALE 1:75

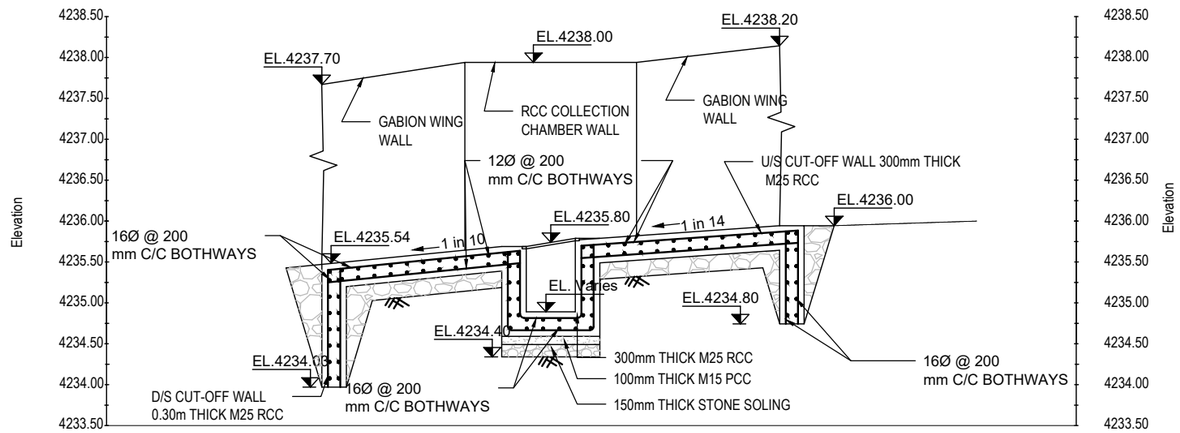

X-SECTION-STRUCTURAL DETAIL

SCALE 1:75

NOTES:-

1. ALL DIMENSIONS AND LEVELS ARE IN METRES UNLESS OTHERWISE SPECIFIED.
2. NO DIMENSION SHOULD BE MEASURED FROM THE DRAWING.

SCALE 1 : 75

7.5 0 7.5 15.0 22.5 30.0 37.5cm

ISSUED FOR TENDERING

Consultant: DRUK GREEN CONSULTANCY		Owner: DEPARTMENT OF ENERGY, MINISTRY OF ENERGY AND NATURAL RESOURCES
Date April 2025	Revised date	Project: **500 kW LUNANA MINI HYDROPOWER PROJECT** GASA, BHUTAN
Designed	Verified	Title: TRENCH WEIR SECTIONS
Reviewed	Approved	
Drawn	Scale AS SHOWN	Drawing No.
THIS DRAWING IS MEANT FOR FSR NOT TO BE USED FOR CONSTRUCTION.		DGPC/DGC/LMHP/CIVIL-08 Rev.

Projects & Contract Department * Contracts Section * DGPC BHUTAN

Cad File No: C:\Users\t.chophel3712\Desktop\TAS 2025\Lunana Tender Drawins\Civil\dwg\Trench weir Plan and section, HRP, Cross Drainage & Dry wall section (1).dwg

Apr 21, 2025 - 12:48pm

NOTES:-

1. ALL DIMENSIONS AND LEVELS ARE IN METRES UNLESS OTHERWISE SPECIFIED.
2. NO DIMENSION SHOULD BE MEASURED FROM THE DRAWING.

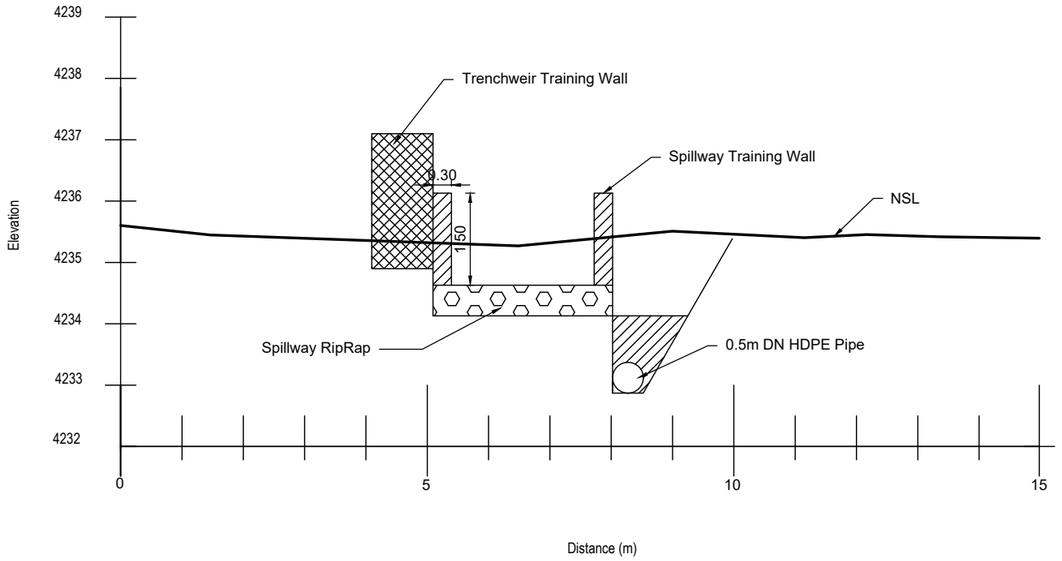

X- Section of Spillway & Shingle Flushing Pipe

SCALE 1:100

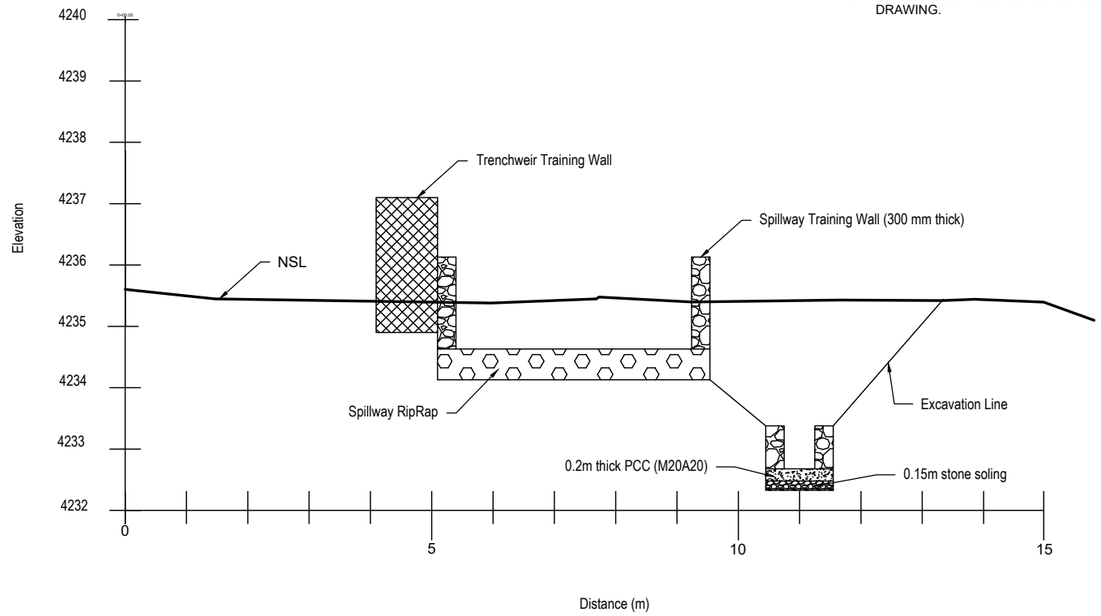

X- Section of Spillway & Shingle Flushing Pipe

SCALE 1:100

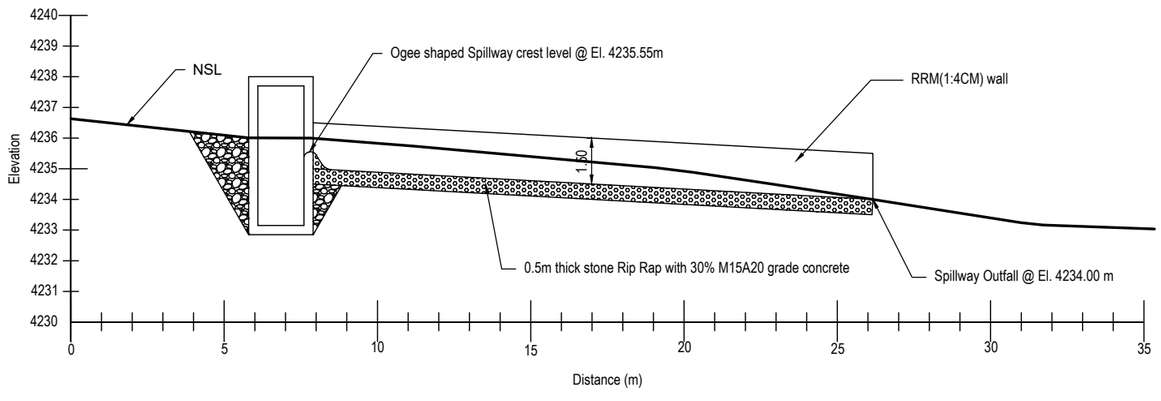

L-Section (Spillway)

SCALE 1:200

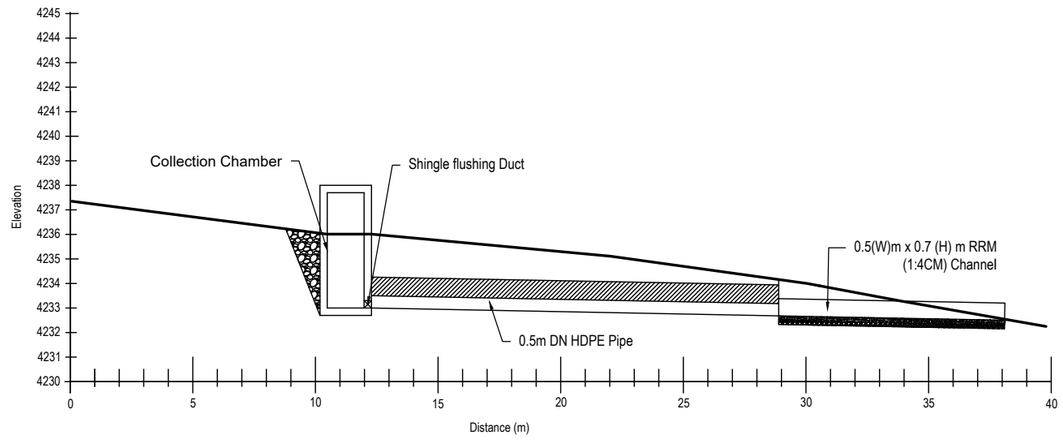

L- Section (Shingle Flushing Channel/Pipe)

SCALE 1:250

ISSUED FOR TENDERING

SCALE 1 : 100 — 1.0 0 1.0 2.0 3.0 4.0 5.0m

SCALE 1 : 200 — 2.0 0 2.0 4.0 6.0 8.0 10.0m

SCALE 1 : 125 — 1.25 0 1.25 2.5 3.75 5.0 6.25m

Projects & Contract Department * Contracts Section * DGPC BHUTAN

Consultant: DRUK GREEN CONSULTANCY		Owner: DEPARTMENT OF ENERGY, MINISTRY OF ENERGY AND NATURAL RESOURCES
Date: April 2025	Revised date	Project: **500 kW LUNANA MINI HYDROPOWER PROJECT**, GASA, BHUTAN
Designed	Verified	Title: TRENCHWEIR SHINGLE FLUSHING & SPILLWAY SECTION
Reviewed	Approved	
Drawn	Scale: As Shown	Drawing No.
THIS DRAWING IS MEANT FOR FSR NOT TO BE USED FOR CONSTRUCTION.		DGPC/DGC/LMHP/CIVIL-09 — Rev. 0

NOTES:-

1. ALL DIMENSIONS AND LEVELS ARE IN METRES UNLESS OTHERWISE SPECIFIED.
2. NO DIMENSION SHOULD BE MEASURED FROM THE DRAWING.

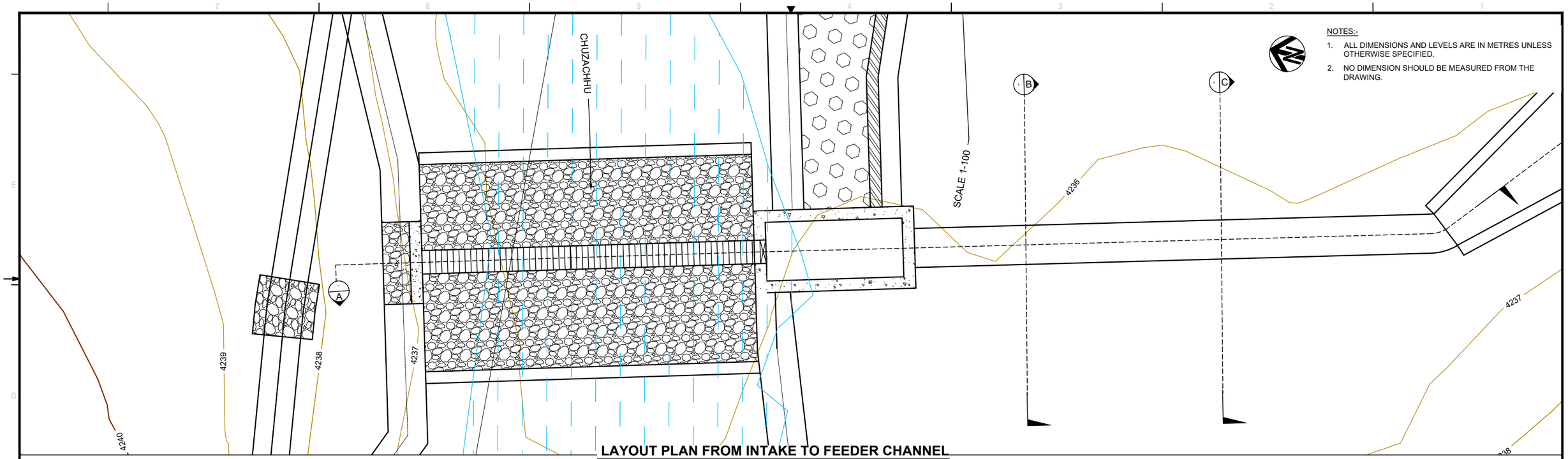

LAYOUT PLAN FROM INTAKE TO FEEDER CHANNEL

SCALE 1:100

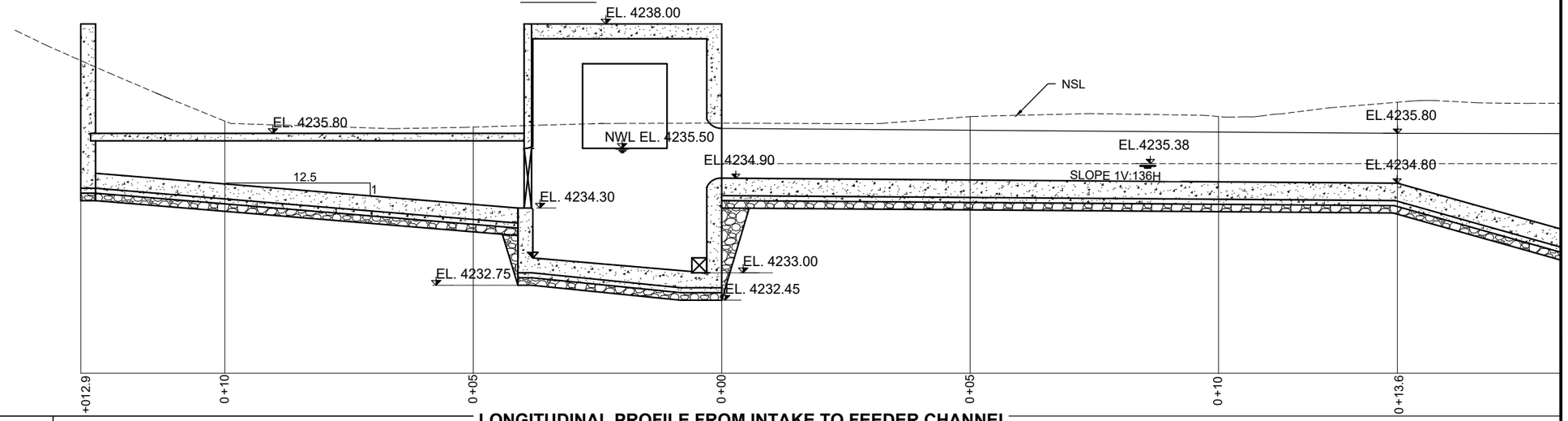

LONGITUDINAL PROFILE FROM INTAKE TO FEEDER CHANNEL

SCALE 1:100

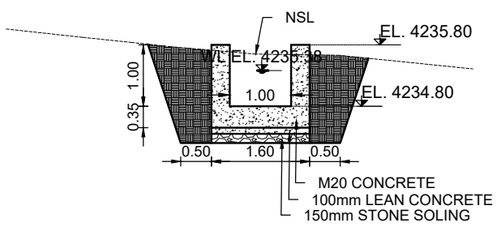

SECTION B

SCALE 1:100

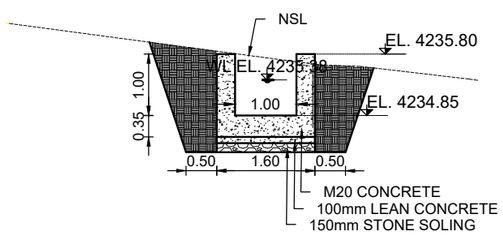

SECTION C

SCALE 1:100

SCALE 1:100 1 0 1 2 3 4 5

ISSUED FOR TENDERING

Projects & Contract Department * Contracts Section * DGPC BHUTAN

Consultant: DRUK GREEN CONSULTANCY		Owner: DEPARTMENT OF ENERGY, MINISTRY OF ENERGY AND NATURAL RESOURCES
Date April 2025	Revised date	Project: **500 kW LUNANA MINI HYDROPOWER PROJECT** GASA, BHUTAN
Designed	Verified	Title: FEEDER CHANNEL LAYOUT PLAN AND LONGITUDINAL SECTION
Reviewed	Approved	
Drawn	Scale 1:100	Drawing No.
THIS DRAWING IS MEANT FOR FSR NOT TO BE USED FOR CONSTRUCTION.		DGPC/DGC/LMHP/CIVIL-10 Rev. 0

Cad File No: C:\Users\t.chophel3712\Desktop\TAS 2025\Lunana Tender Drawins\Civil\dwg\Feeder Channel (1).dwg

Apr 21, 2025 - 12:55pm

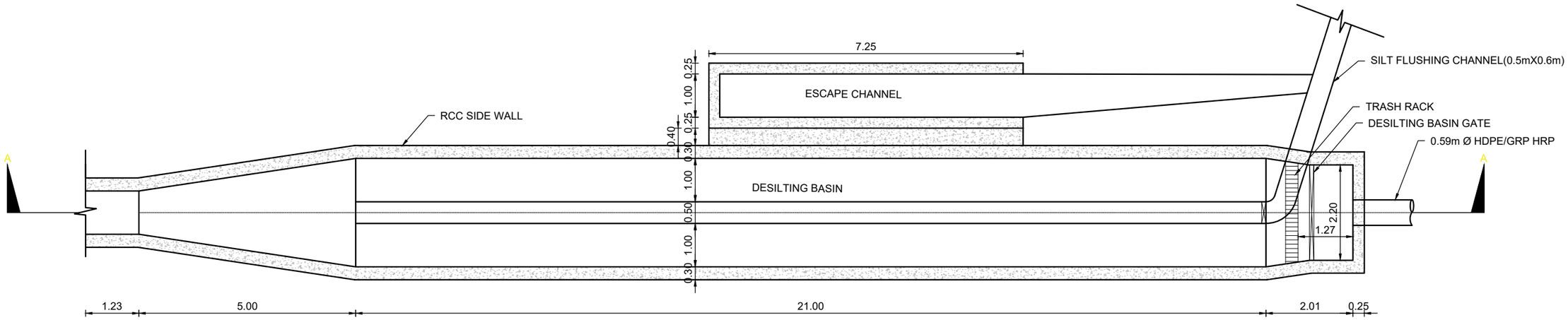

PLAN
SCALE 1:100

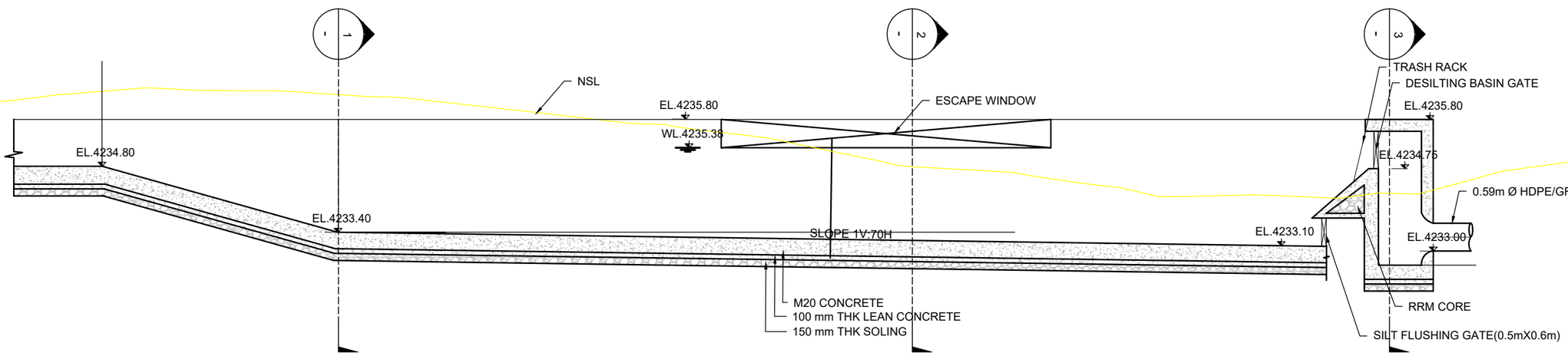

Section A-A
SCALE 1:100

ISSUED FOR TENDERING

NOTES:-

1. ALL DIMENSIONS AND LEVELS ARE IN METRES UNLESS OTHERWISE SPECIFIED.
2. NO DIMENSION SHOULD BE MEASURED FROM THE DRAWING.

SCALE 1 : 100 — 1.0 0 1.0 2.0 3.0 4.0 5.0m

Projects & Contract Department * Contracts Section * DGPC BHUTAN

Consultant: DRUK GREEN CONSULTANCY		Owner: DEPARTMENT OF ENERGY, MINISTRY OF ENERGY AND NATURAL RESOURCES	
Date April 2025	Revised date	Project: **500 kW LUNANA MICRO HYDROPOWER PROJECT** GASA, BHUTAN	
Designed	Verified	Title: DESILTING BASIN PLAN & SECTION	
Reviewed	Approved		
Drawn	Scale AS SHOWN	Drawing No.	
THIS DRAWING IS MEANT FOR FSR NOT TO BE USED FOR CONSTRUCTION.		DGPC/DGC/LMHP/CIVIL-11	Rev. 0

Cad File No: C:\Users\t.chophel3712\Desktop\TAS 2025\Lunana Tender Drawins\Civil\dwg\DESILTING BASIN DRAWING (1).dwg

Apr 21, 2025 - 12:54pm

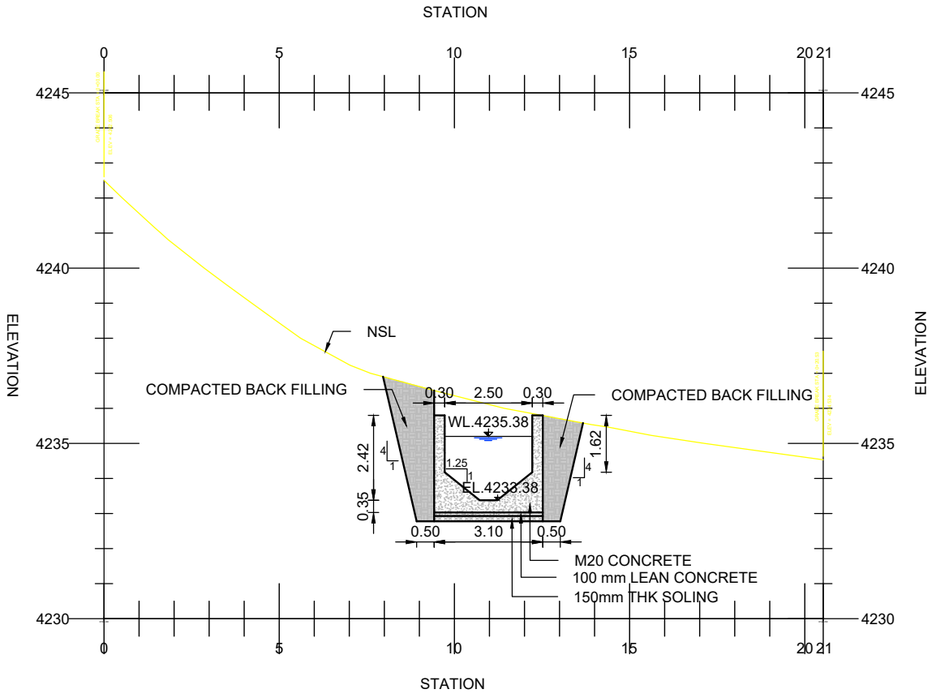

PROFILE VIEW OF DB 1

SCALE 1:175

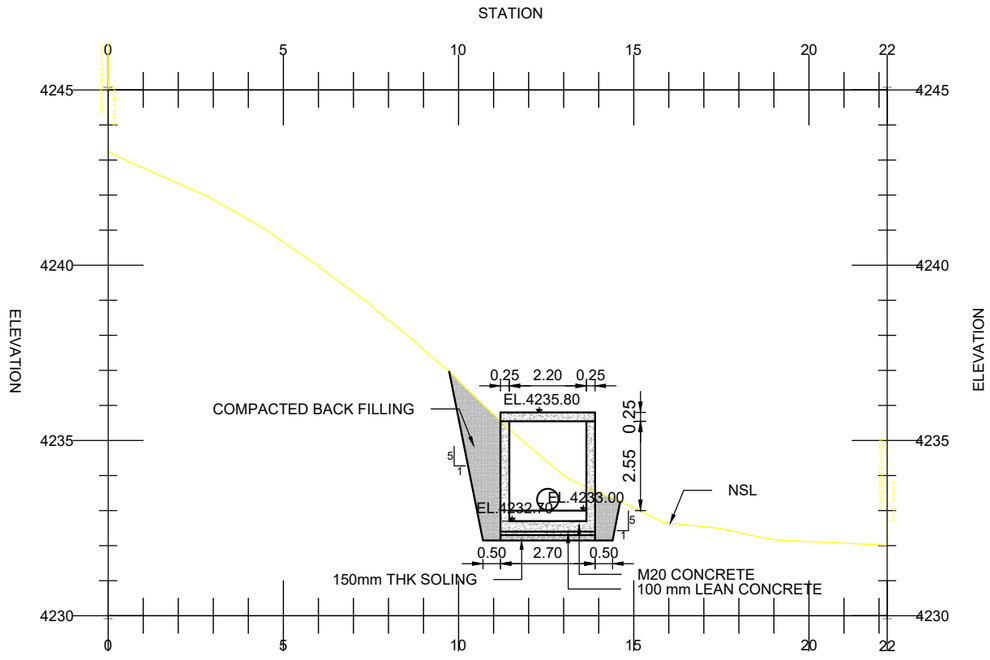

PROFILE VIEW OF DB 3

SCALE 1:175

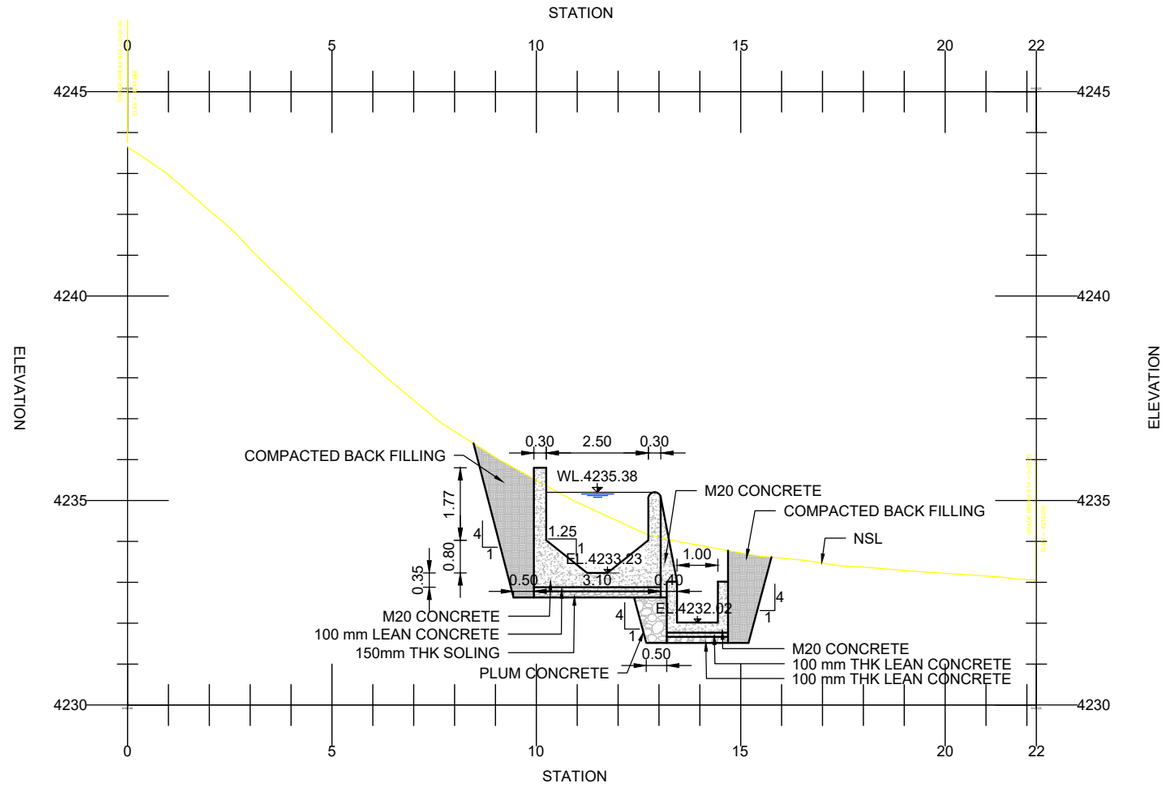

PROFILE VIEW OF DB 2

SCALE 1:150

NOTES:-

1. ALL DIMENSIONS AND LEVELS ARE IN METRES UNLESS OTHERWISE SPECIFIED.
2. NO DIMENSION SHOULD BE MEASURED FROM THE DRAWING.

SCALE 1 : 150 — 1.5 0 1.5 3.0 4.5 6.0 7.5m

SCALE 1 : 175 — 1.75 0 1.75 3.5 5.25 7.0 8.75m

ISSUED FOR TENDERING

Consultant: DRUK GREEN CONSULTANCY		Owner: DEPARTMENT OF ENERGY, MINISTRY OF ENERGY AND NATURAL RESOURCES
Date April 2025	Revised date	Project: **500 kW LUNANA MICRO HYDROPOWER PROJECT** GASA, BHUTAN
Designed	Verified	Title: DESILTING BASIN CROSS SECTIONS
Reviewed	Approved	
Drawn	Scale AS SHOWN	Drawing No.
THIS DRAWING IS MEANT FOR FSR NOT TO BE USED FOR CONSTRUCTION.		DGPC/DGC/LMHP/CIVIL-12 Rev. 0

Cad File No: C:\Users\t.chophel3712\Desktop\TAS 2025\Lunana Tender Drawins\Civil\dwg\DESILTING BASIN DRAWING (1).dwg

Apr 21, 2025 - 12:54pm

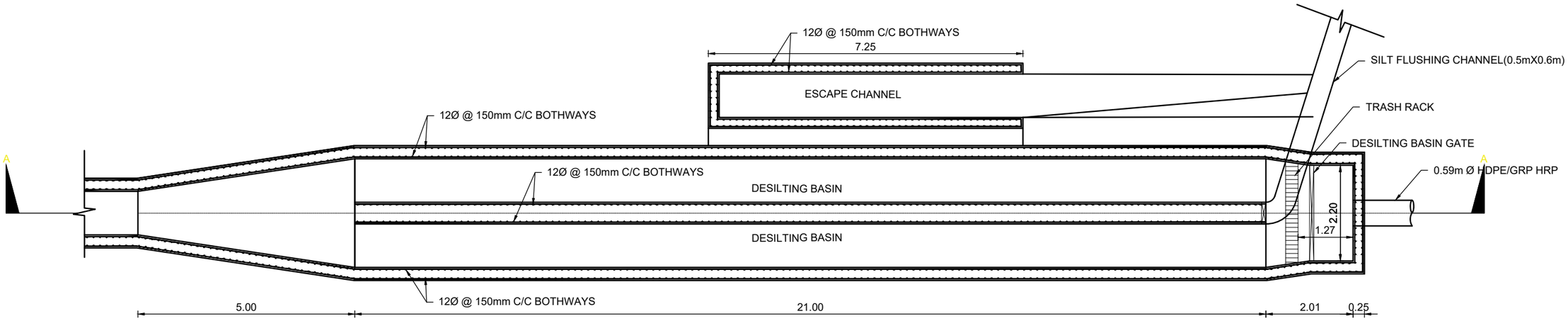

PLAN
SCALE 1:100

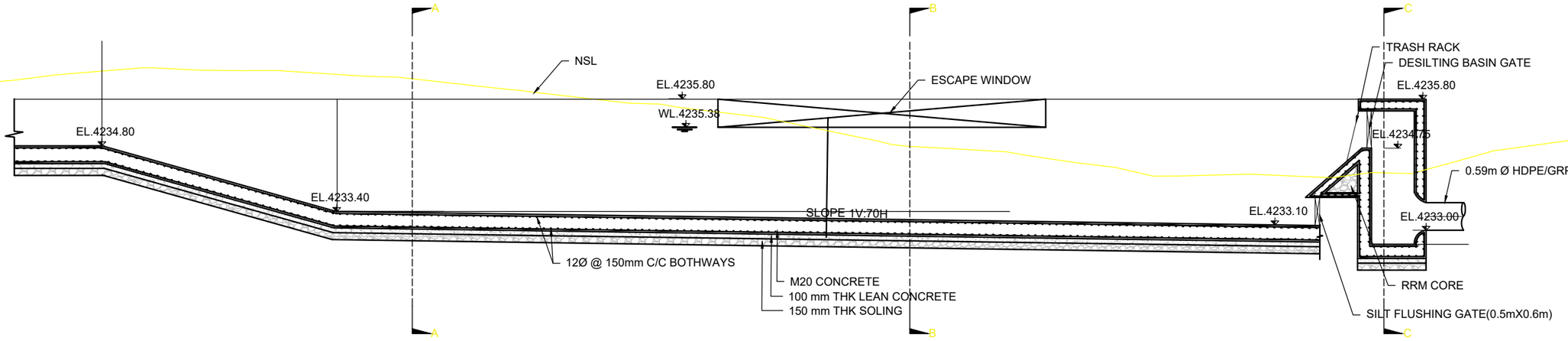

Section A-A
SCALE 1:100

ISSUED FOR TENDERING

NOTES:-

1. ALL DIMENSIONS AND LEVELS ARE IN METRES UNLESS OTHERWISE SPECIFIED.
2. NO DIMENSION SHOULD BE MEASURED FROM THE DRAWING.

SCALE 1 : 100 — 1.0 0 1.0 2.0 3.0 4.0 5.0m

Projects & Contract Department * Contracts Section * DGPC BHUTAN

Consultant: DRUK GREEN CONSULTANCY		Owner: DEPARTMENT OF ENERGY, MINISTRY OF ENERGY AND NATURAL RESOURCES
Date April 2025	Revised date	Project: **500 kW LUNANA MICRO HYDROPOWER PROJECT** GASA, BHUTAN
Designed	Verified	Title: DESILTING BASIN PLAN & SECTION (REBAR)
Reviewed	Approved	
Drawn	Scale AS SHOWN	Drawing No.
THIS DRAWING IS MEANT FOR FSR NOT TO BE USED FOR CONSTRUCTION.		DGPC/DGC/LMHP/CIVIL-13 Rev. 0

Cad File No: C:\Users\t.chophel3712\Desktop\TAS 2025\Lunana Tender Drawins\Civil\dwg\DESILTING BASIN DRAWING (1).dwg

Apr 21, 2025 - 12:54pm

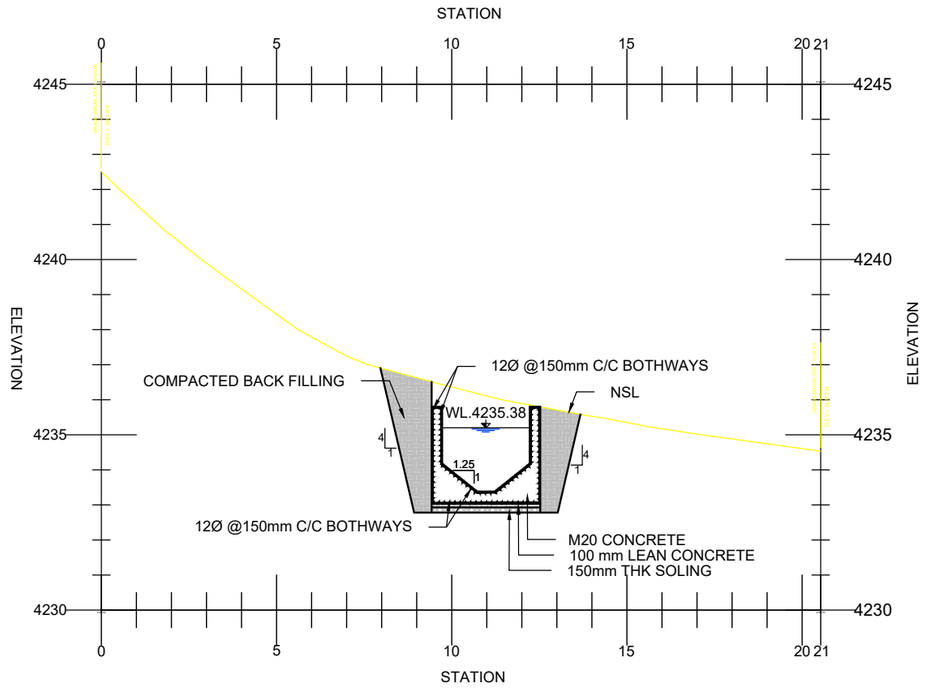

SECTION A-A

SCALE 1:175

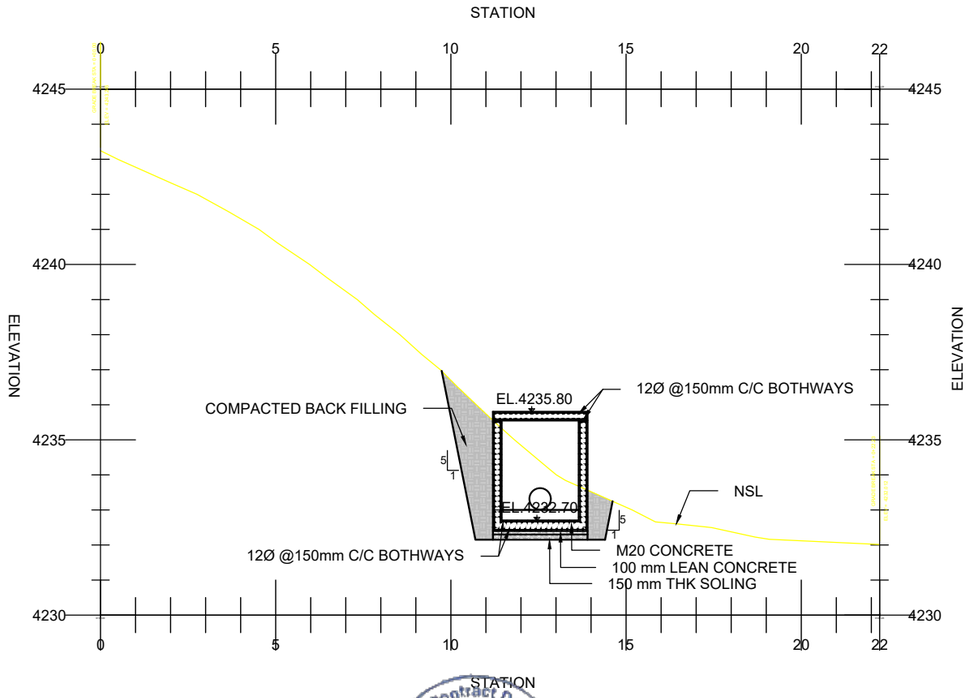

SECTION C-C

SCALE 1:175

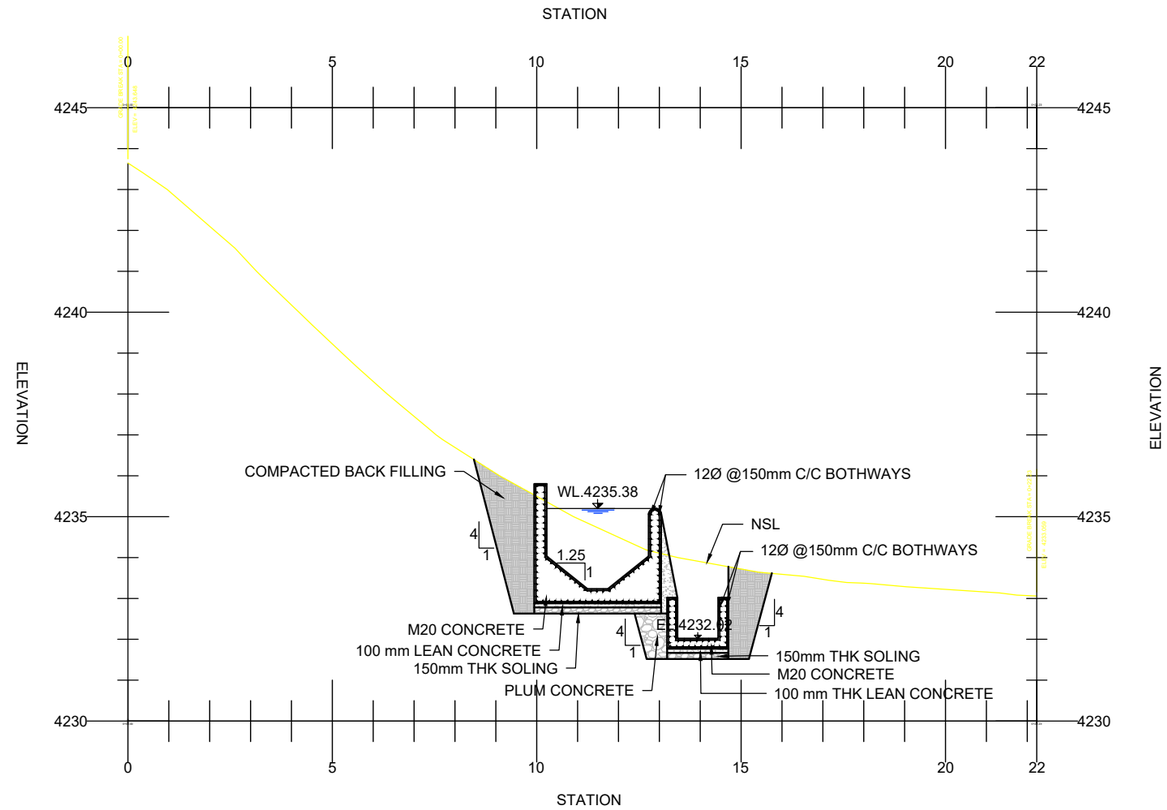

SECTION B-B

SCALE 1:150

NOTES:-

1. ALL DIMENSIONS AND LEVELS ARE IN METRES UNLESS OTHERWISE SPECIFIED.
2. NO DIMENSION SHOULD BE MEASURED FROM THE DRAWING.

SCALE 1 : 150 — 1.5 0 1.5 3.0 4.5 6.0 7.5m

SCALE 1 : 175 — 1.75 0 1.75 3.5 5.25 7.0 8.75m

ISSUED FOR TENDERING

Consultant: DRUK GREEN CONSULTANCY		Owner: DEPARTMENT OF ENERGY, MINISTRY OF ENERGY AND NATURAL RESOURCES	
Date April 2025	Revised date	Project: **500 kW LUNANA MICRO HYDROPOWER PROJECT** GASA, BHUTAN	
Designed	Verified	Title: DESILTING BASIN CROSS SECTIONS (REBAR)	
Reviewed	Approved		
Drawn	Scale AS SHOWN	Drawing No.	
THIS DRAWING IS MEANT FOR FSR NOT TO BE USED FOR CONSTRUCTION.		DGPC/DGC/LMHP/CIVIL-14	Rev. 0

Projects & Contract Department * DGPC BHUTAN * Contracts Section

Cad File No: C:\Users\t.chophel3712\Desktop\TAS 2025\Lunana Tender Drawins\Civil\dwg\DESILTING BASIN DRAWING (1).dwg

Apr 21, 2025 - 12:54pm

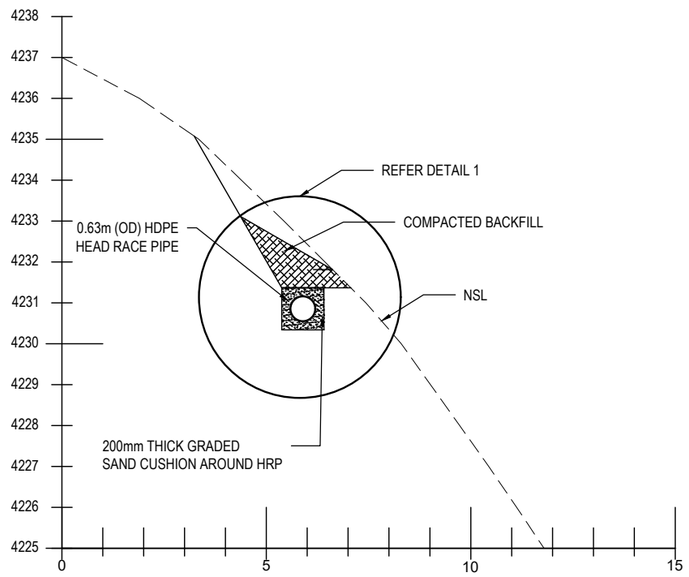

TYPICAL HRP SECTION
SCALE 1:150

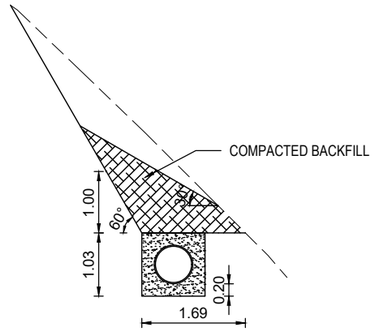

DETAIL 1
SCALE 1:100

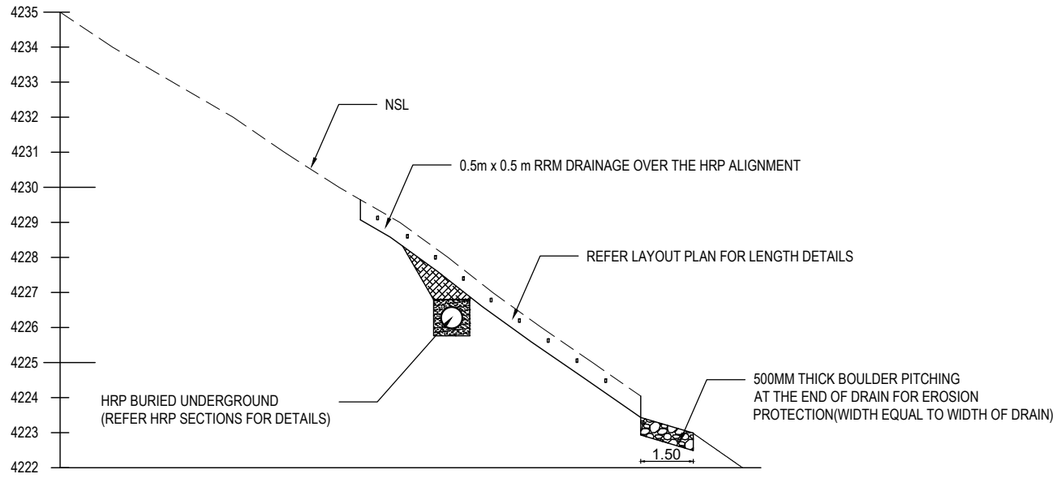

TYPICAL HRP CROSS DRAINAGE DETAILS
SCALE 1:175

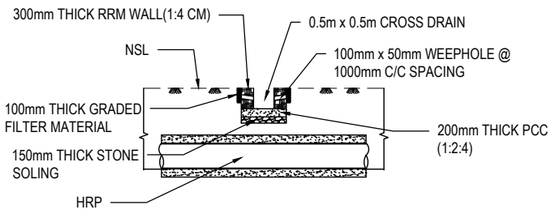

X-SECTION OF CROSS DRAINAGE
SCALE 1:150

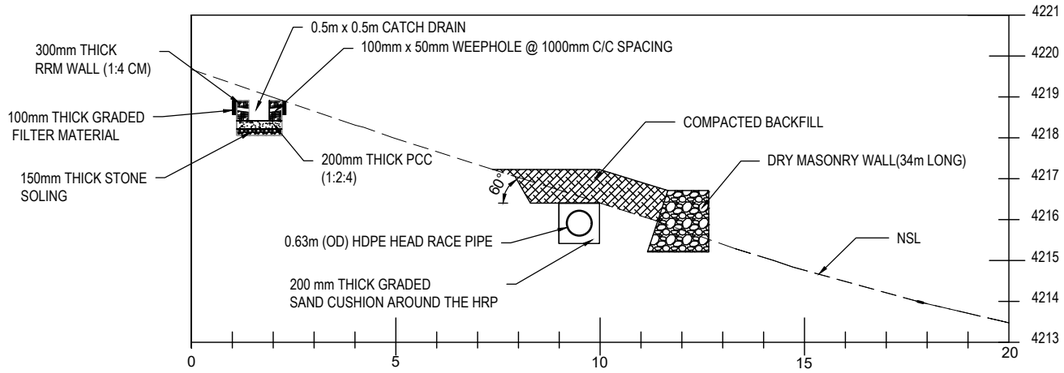

TYPICAL SECTION FOR HRP, CROSS DRAINAGE & DRY WALL
SCALE 1:150

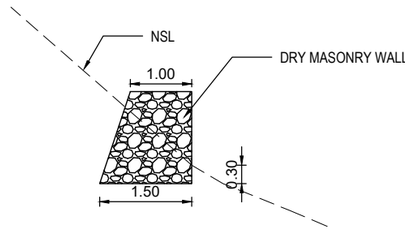

TYPICAL DRY WALL SECTION
SCALE 1:100

ISSUED FOR TENDERING

NOTES:-

1. ALL DIMENSIONS AND LEVELS ARE IN METRES UNLESS OTHERWISE SPECIFIED.
2. NO DIMENSION SHOULD BE MEASURED FROM THE DRAWING.

SCALE 1 : 150 — 1.5 0 1.5 3.0 4.5 6.0 7.5m

SCALE 1 : 100 — 1.0 0 1.0 2.0 3.0 4.0 5.0m

SCALE 1 : 175 — 1.75 0 1.75 3.5 5.25 7.0 8.75m

Projects & Contract Department * Contracts Section * DGPC BHUTAN

Consultant: DRUK GREEN CONSULTANCY		Owner: DEPARTMENT OF ENERGY, MINISTRY OF ENERGY AND NATURAL RESOURCES
Date April 2025	Revised date	Project: **500 kW LUNANA MINI HYDROPOWER PROJECT** GASA, BHUTAN
Designed	Verified	Title: HEAD RACE PIPE, CROSS DRAINAGE & DRY WALL SECTIONS
Reviewed	Approved	
Drawn	Scale AS SHOWN	Drawing No.
THIS DRAWING IS MEANT FOR FSR NOT TO BE USED FOR CONSTRUCTION.		DGPC/DGC/LMHP/CIVIL-15 Rev.

Cad File No: C:\Users\t.chophel3712\Desktop\TAS 2025\Lunana Tender Drawins\Civil\dwg\Trench weir Plan and section, HRP, Cross Drainage & Dry wall section (1).dwg

Apr 21, 2025 - 12:48pm

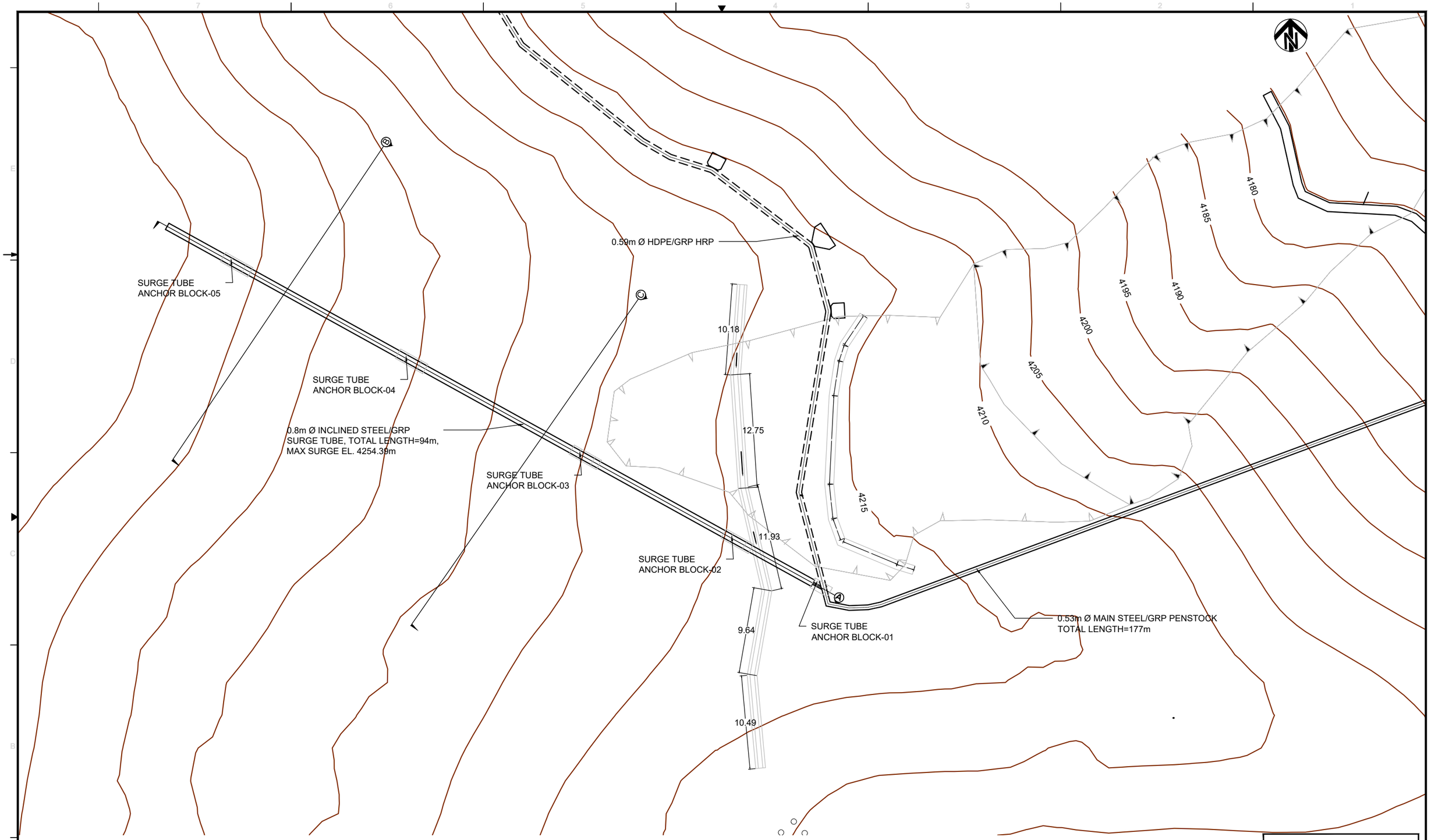

ISSUED FOR TENDERING

GENERAL LAYOUT OF SURGE TUBE

SCALE 1:400

NOTES:-

1. ALL DIMENSIONS AND LEVELS ARE IN METRES UNLESS OTHERWISE SPECIFIED.
2. NO DIMENSION SHOULD BE MEASURED FROM THE DRAWING.

SCALE 1 : 400 — 4 0 4 8 12 16 20m

Projects & Contract Department * Contracts Section * DGPC BHUTAN

Consultant: DRUK GREEN CONSULTANCY		Owner: DEPARTMENT OF ENERGY, MINISTRY OF ENERGY AND NATURAL RESOURCES
Date April 2025	Revised date	Project: **500 kW LUNANA MINI HYDROPOWER PROJECT** GASA, BHUTAN
Designed	Verified	Title: GENERAL LAYOUT OF SURGE TUBE
Reviewed	Approved	
Drawn	Scale AS SHOWN	Drawing No.
THIS DRAWING IS MEANT FOR FSR NOT TO BE USED FOR CONSTRUCTION.		DGPC/DGC/LMHP/CIVIL-16 Rev.

Cad File No: C:\Users\t.chophel3712\Desktop\TAS 2025\Lunana Tender Drawings\Civil\dwg\Surge Tube_07.04.25 (1).dwg

Apr 21, 2025 - 1:14pm

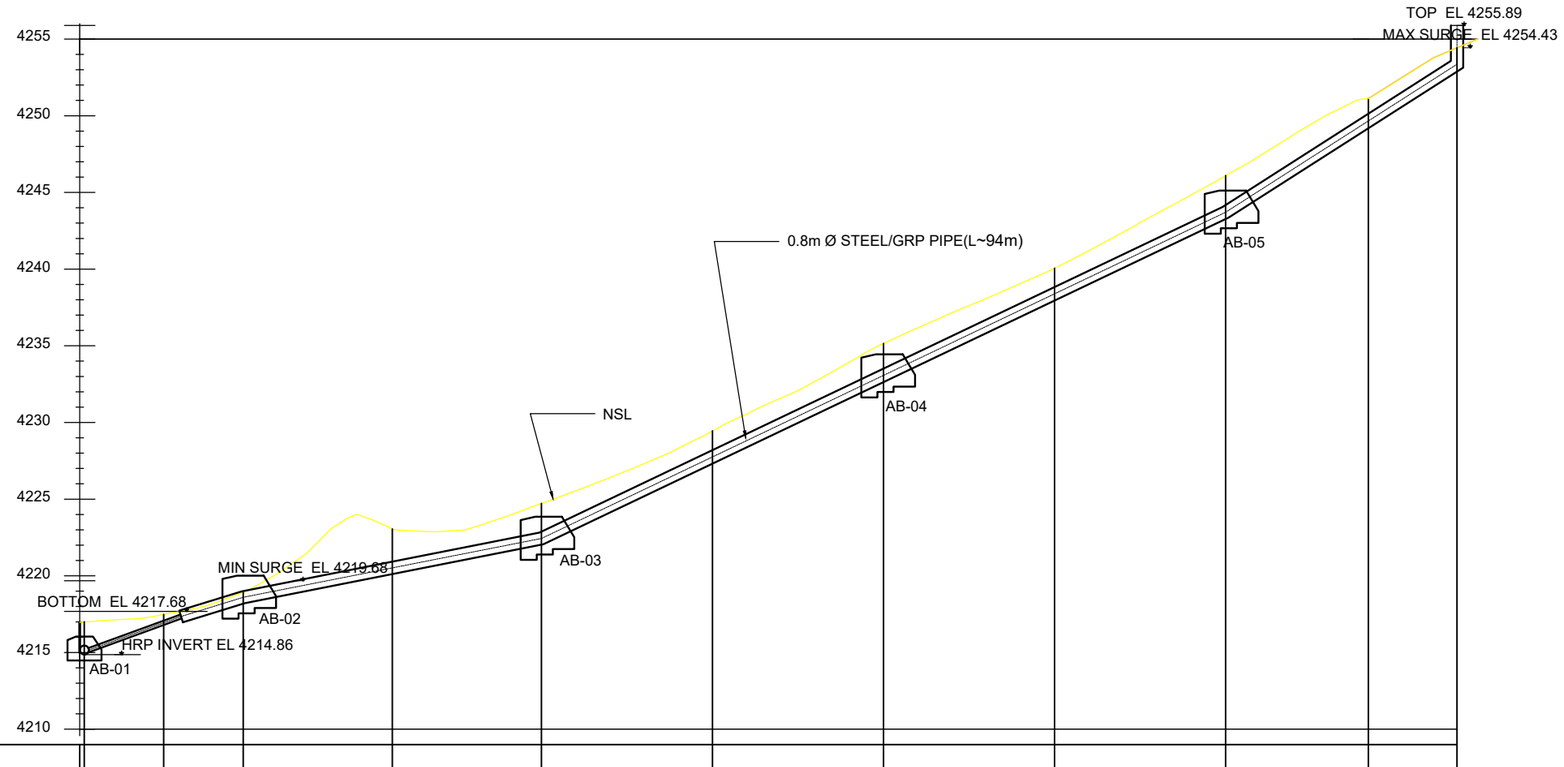

CHAINAGE (m)	NSL (m)	INVERT LEVEL (m)
0.00	4217.00	4214.86
5.19	4217.49	4216.80
10.37	4218.92	4218.18
20.10	4223.06	4220.11
29.83	4224.73	4222.03
40.98	4229.45	4227.31
52.14	4235.16	4232.63
63.30	4240.05	4237.94
74.46	4246.10	4243.26
83.77	4251.12	4249.19
89.56	4254.43	4252.88

ISSUED FOR TENDERING

LONGITUDINAL PROFILE OF SURGE TUBE

SCALE 1:400

NOTES:-

1. ALL DIMENSIONS AND LEVELS ARE IN METRES UNLESS OTHERWISE SPECIFIED.
2. NO DIMENSION SHOULD BE MEASURED FROM THE DRAWING.

SCALE 1 : 400 — 4 0 4 8 12 16 20m

Projects & Contract Department * Contracts Section * DGPC BHUTAN

Consultant: DRUK GREEN CONSULTANCY		Owner: DEPARTMENT OF ENERGY, MINISTRY OF ENERGY AND NATURAL RESOURCES	
Date April 2025	Revised date	Project: **500 kW LUNANA MINI HYDROPOWER PROJECT** GASA, BHUTAN	
Designed	Verified	Title: LONGITUDINAL PROFILE OF SURGE TUBE	
Reviewed	Approved		
Drawn	Scale AS SHOWN	Drawing No.	
THIS DRAWING IS MEANT FOR FSR NOT TO BE USED FOR CONSTRUCTION.		DGPC/DGC/LMHP/CIVIL-17	Rev.

Cad File No: C:\Users\t.chophel3712\Desktop\TAS 2025\Lunana Tender Drawins\Civil\dwg\Surge Tube_07.04.25 (1).dwg

Apr 21, 2025 - 1:14pm

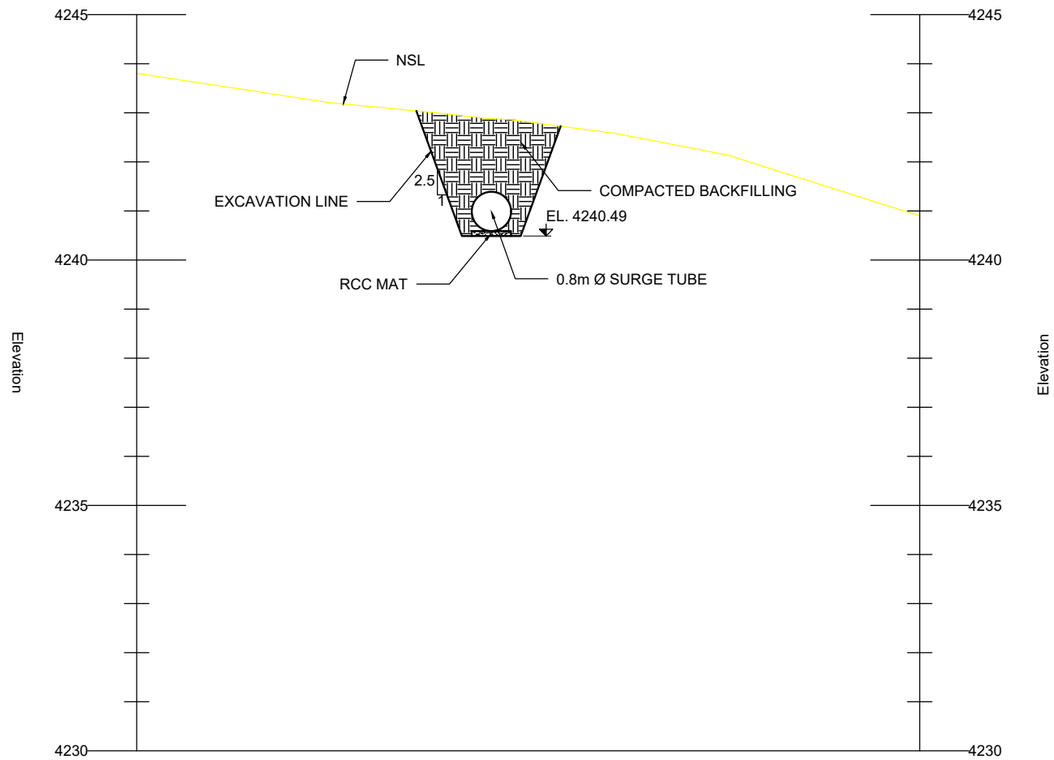

SECTION B
SCALE 1:125

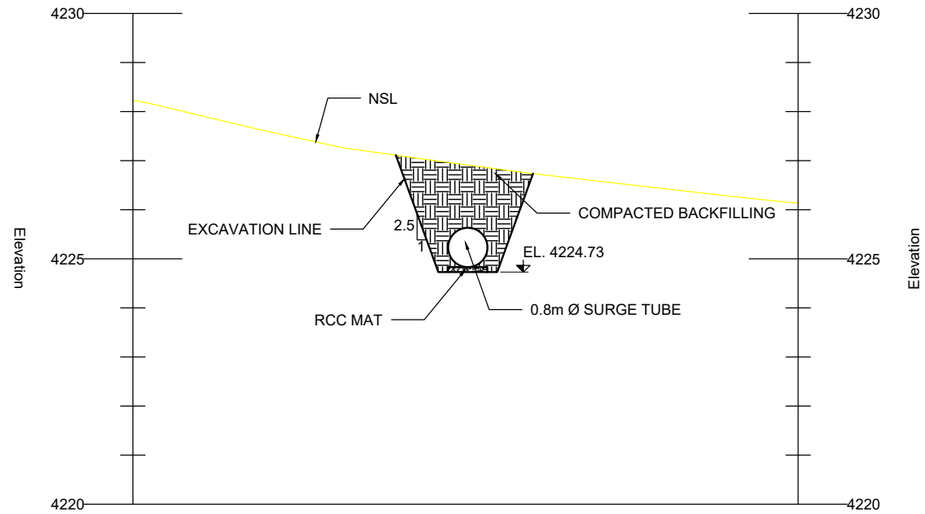

SECTION C
SCALE 1:125

ISSUED FOR TENDERING

NOTES:-

1. ALL DIMENSIONS AND LEVELS ARE IN METRES UNLESS OTHERWISE SPECIFIED.
2. NO DIMENSION SHOULD BE MEASURED FROM THE DRAWING.

SCALE 1 : 125

1.25 0 1.25 2.5 3.75 5.0 6.25m

Projects & Contract Department * Contracts Section * DGPC BHUTAN

Consultant: DRUK GREEN CONSULTANCY		Owner: DEPARTMENT OF ENERGY MINISTRY OF ENERGY AND NATURAL RESOURCES
Date April 2025	Revised date	Project: **500 kW LUNANA MINI HYDROPOWER PROJECT** GASA, BHUTAN
Designed	Verified	Title: CROSS SECTIONS OF SURGE TUBE
Reviewed	Approved	
Drawn	Scale AS SHOWN	Drawing No.
THIS DRAWING IS MEANT FOR FSR NOT TO BE USED FOR CONSTRUCTION.		DGPC/DGC/LMHP/CIVIL-18 Rev.

Cad File No: C:\Users\t.chophel3712\Desktop\TAS 2025\Lunana Tender Drawins\Civil\dwg\Surge Tube_07.04.25 (1).dwg

Apr 21, 2025 - 1:14pm

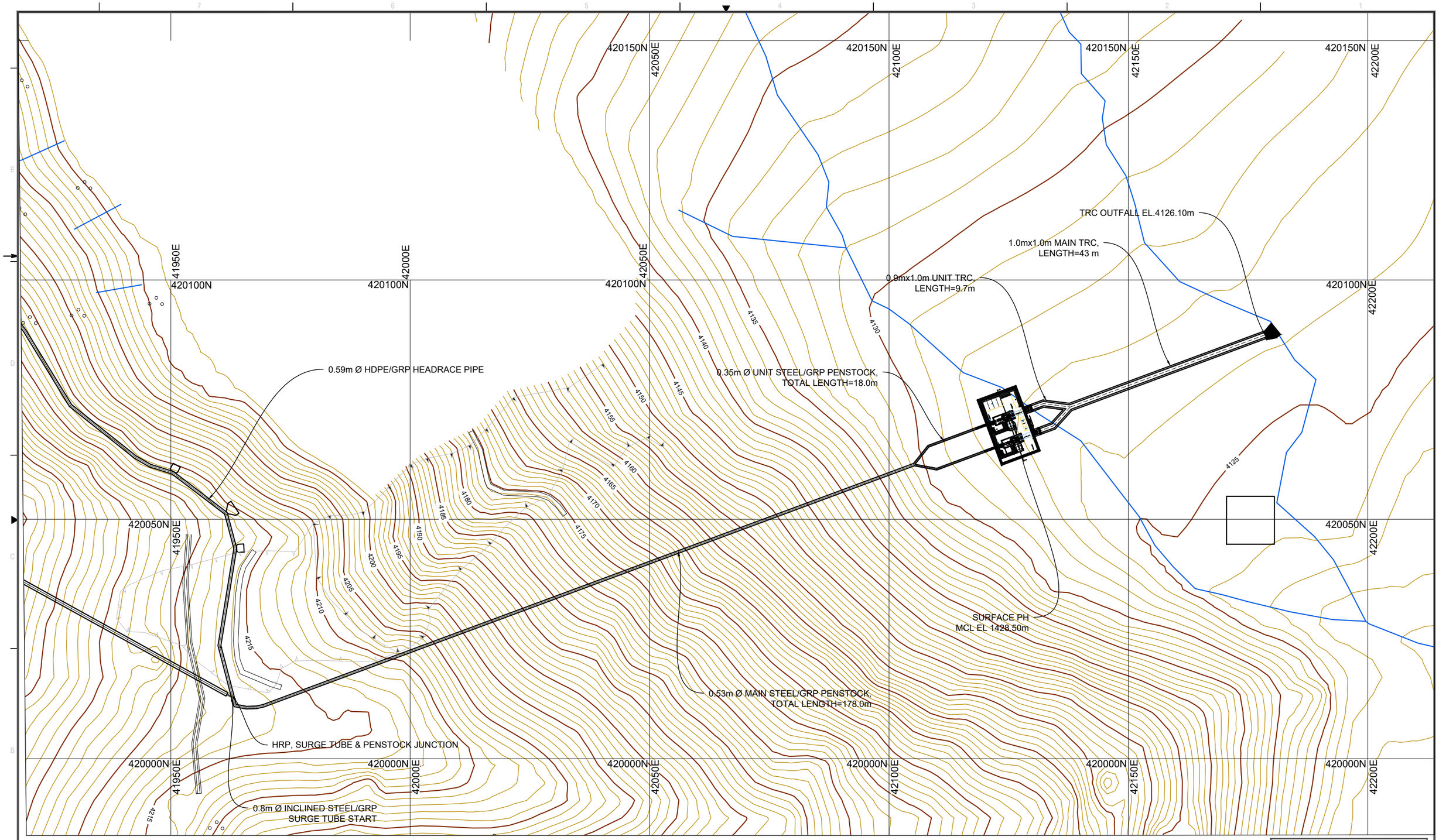

NOTES:-

1. ALL DIMENSIONS AND LEVELS ARE IN METRES UNLESS OTHERWISE SPECIFIED.
2. NO DIMENSION SHOULD BE MEASURED FROM THE DRAWING.

LAYOUT PLAN AT POWERHOUSE
SCALE-1:750

ISSUED FOR TENDERING

Projects & Contract Department * Contracts Section * DGPC BHUTAN

Consultant: DRUK GREEN CONSULTANCY	Owner: DEPARTMENT OF ENERGY, MINISTRY OF ENERGY AND NATURAL RESOURCES
Date: April 2025 / Revised date	Project: **500 kW LUNANA MINI HYDROPOWER PROJECT**, GASA, BHUTAN
Designed / Verified	Title: PENSTOCK LAYOUT PLAN
Reviewed / Approved	
Drawn / Scale 1:750	Drawing No.
THIS DRAWING IS MEANT FOR FSR NOT TO BE USED FOR CONSTRUCTION.	DGPC/DGC/LMHP/CIVIL-19 — Rev. 0

Cad File No: C:\Users\t.chephel3712\Desktop\TAS 2025\Lunana Tender Drawins\Civil\dwg\PENSTOCK_07.04.25.dwg

Apr 21, 2025 - 12:57pm

NOTES:-

1. ALL DIMENSIONS AND LEVELS ARE IN METRES UNLESS OTHERWISE SPECIFIED.
2. NO DIMENSION SHOULD BE MEASURED FROM THE DRAWING.

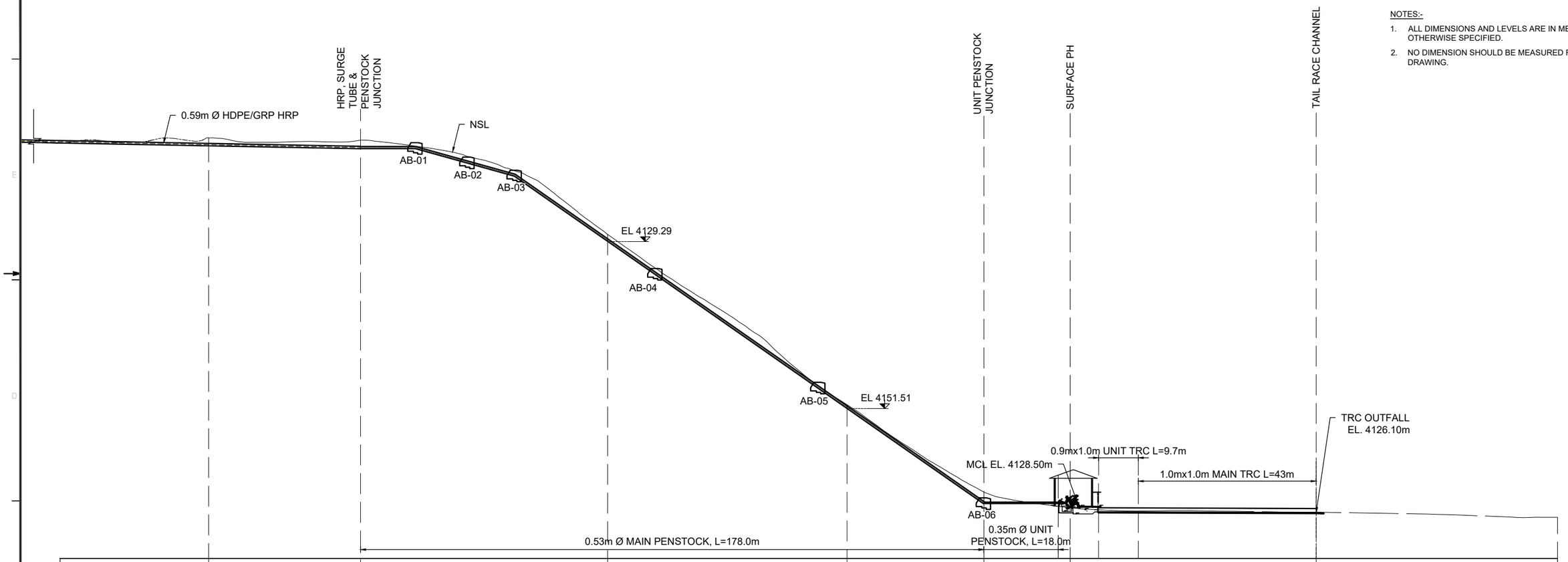

CHAINAGE(m)	957.13	994.21	1054.49	1112.92	1112.92	1167.37	1227.40
NSL(m)	4217.52	4216.98	4194.00	4152.43	4152.43	4127.29	4126.22
INVERT LEVEL(m)	4215.58	4214.86	4192.29	4151.51	4151.51	4126.00	4126.10

LONGITUDINAL PROFILE OF PENSTOCK
SCALE-1:1000

SCALE 1:3500 (35 0 70 140)

Projects & Contract Department * Contracts Section * DGPC BHUTAN

ISSUED FOR TENDERING

Consultant: DRUK GREEN CONSULTANCY		Owner: DEPARTMENT OF ENERGY, MINISTRY OF ENERGY AND NATURAL RESOURCES
Date April 2025	Revised date	Project: **500 kW LUNANA MINI HYDROPOWER PROJECT** GASA, BHUTAN
Designed	Verified	Title: GENERAL PROJECT LAYOUT
Reviewed	Approved	
Drawn	Scale 1:1000	Drawing No.
THIS DRAWING IS MEANT FOR FSR NOT TO BE USED FOR CONSTRUCTION.		DGPC/DGC/LMHP/CIVIL-20 Rev. 0

Cad File No: C:\Users\t.chophel3712\Desktop\TAS 2025\Lunana Tender Drawins\Civil\dwg\PENSTOCK_07.04.25.dwg

Apr 21, 2025 - 12:58pm

NOTES:-

1. ALL DIMENSIONS AND LEVELS ARE IN METRES UNLESS OTHERWISE SPECIFIED.
2. NO DIMENSION SHOULD BE MEASURED FROM THE DRAWING.

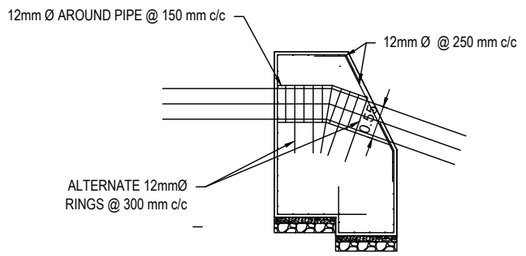

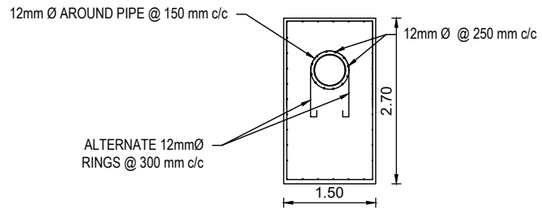

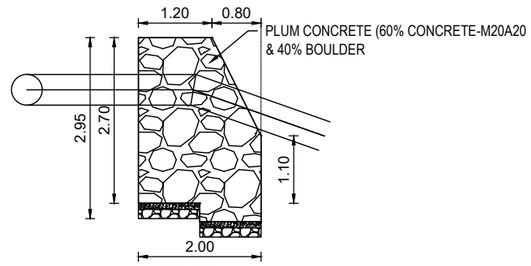

AB-01
SCALE-1:100

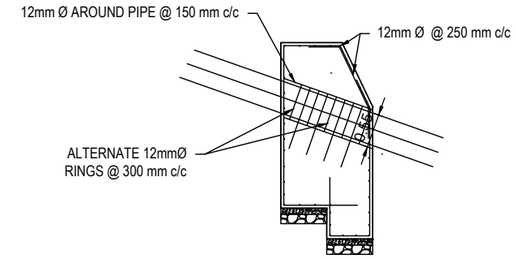

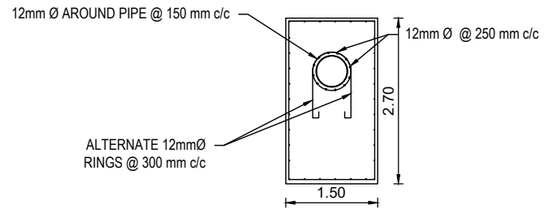

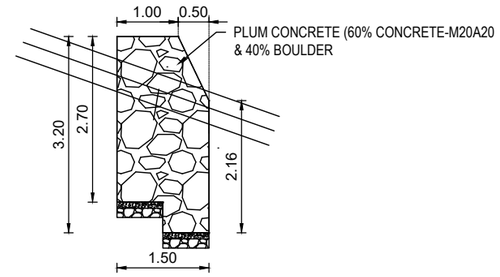

AB-02
SCALE-1:100

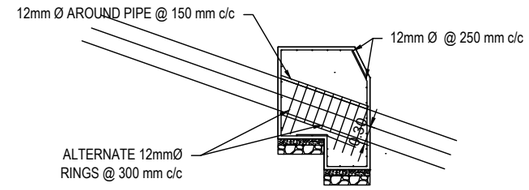

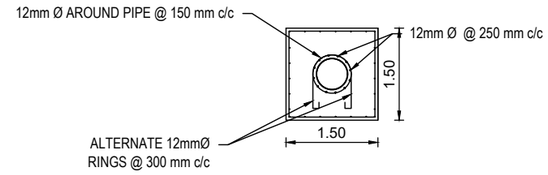

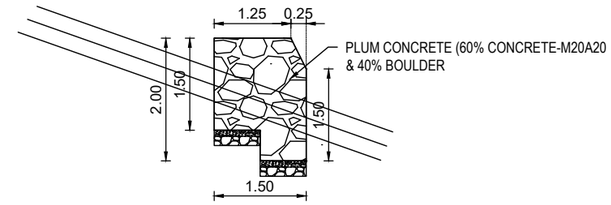

AB-03
SCALE-1:100

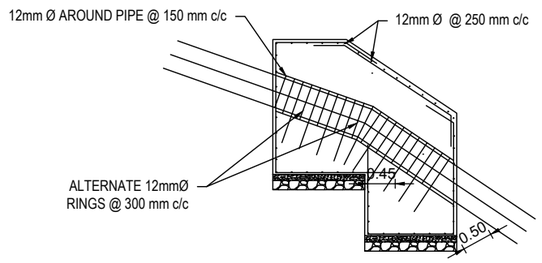

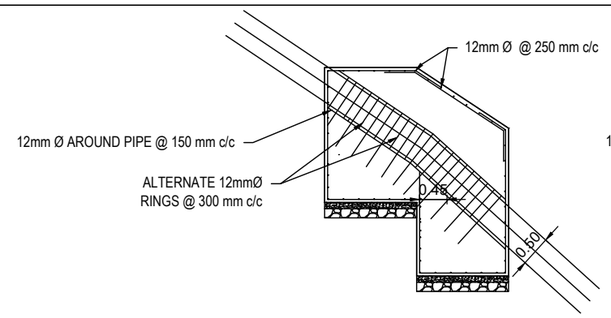

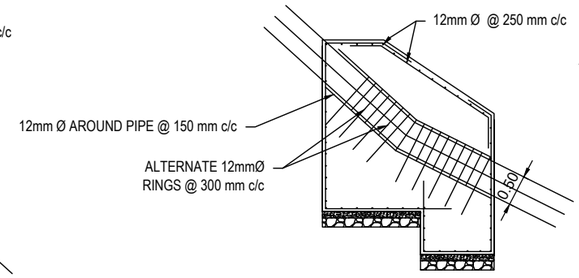

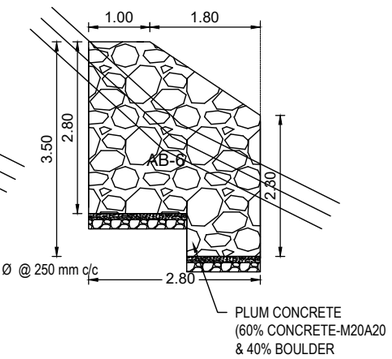

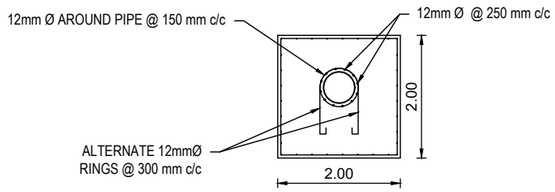

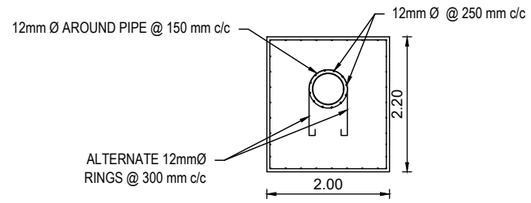

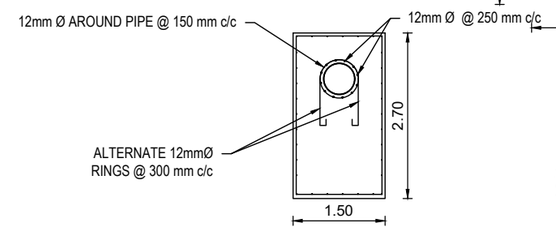

AB-06
SCALE-1:100

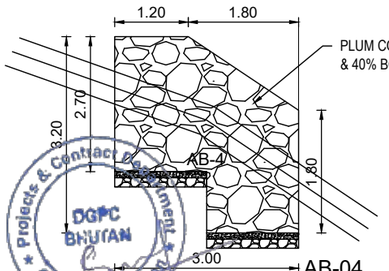

AB-04
SCALE-1:100

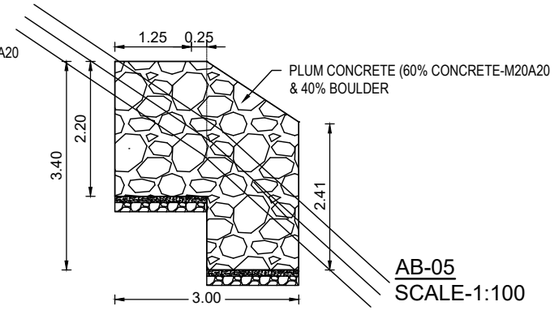

AB-05
SCALE-1:100

Projects & Contract Management
DGPC
BHUTAN
Contracts Section

ISSUED FOR TENDERING

Consultant: DRUK GREEN CONSULTANCY		Owner: DEPARTMENT OF ENERGY, MINISTRY OF ENERGY AND NATURAL RESOURCES	
Date April 2025	Revised date	Project: **500 kW LUNANA MINI HYDROPOWER PROJECT** GASA, BHUTAN	
Designed	Verified	Title: PENSTOCK SUPPORT SYSTEM DETAILS	
Reviewed	Approved		
Drawn	Scale 1:100	Drawing No.	
THIS DRAWING IS MEANT FOR FSR NOT TO BE USED FOR CONSTRUCTION.		DGPC/DGC/LMHP/CIVIL-21	Rev. 0

NOTES:-

1. ALL DIMENSIONS AND LEVELS ARE IN METRES UNLESS OTHERWISE SPECIFIED.
2. NO DIMENSION SHOULD BE MEASURED FROM THE DRAWING.

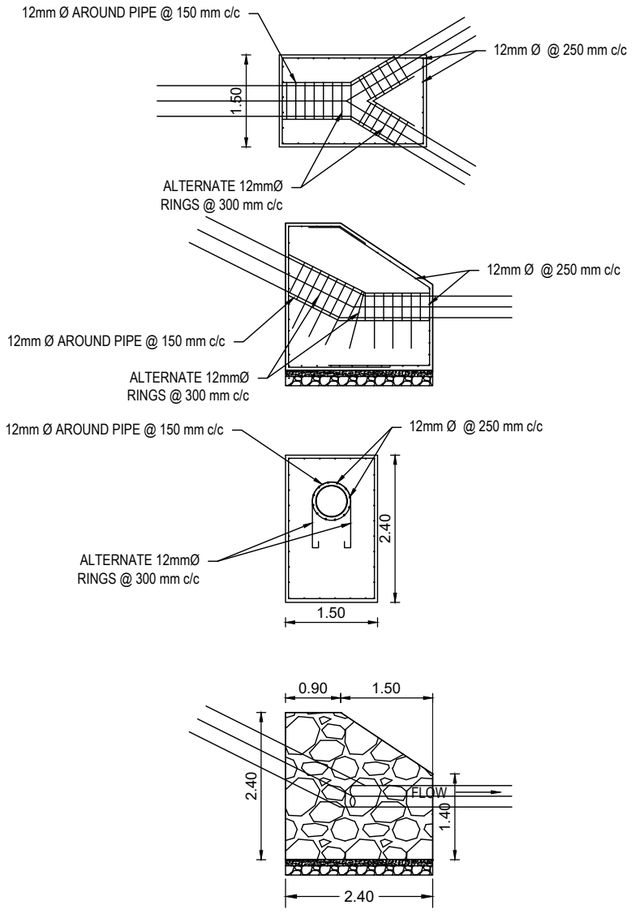

AB-07
SCALE-1:100

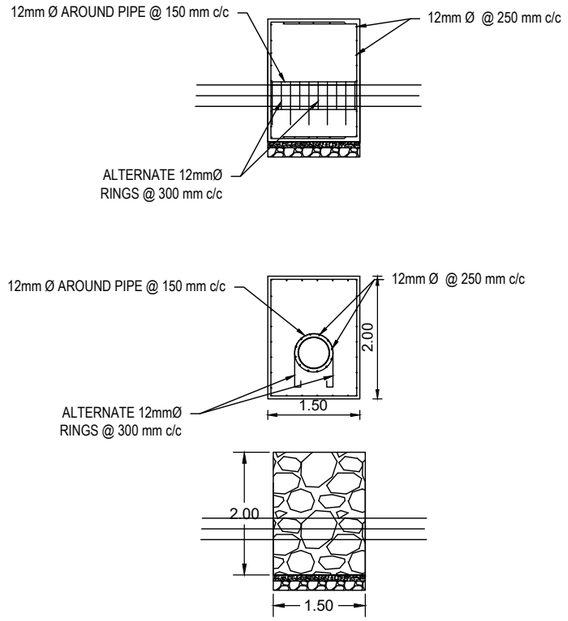

AB-08
SCALE-1:100

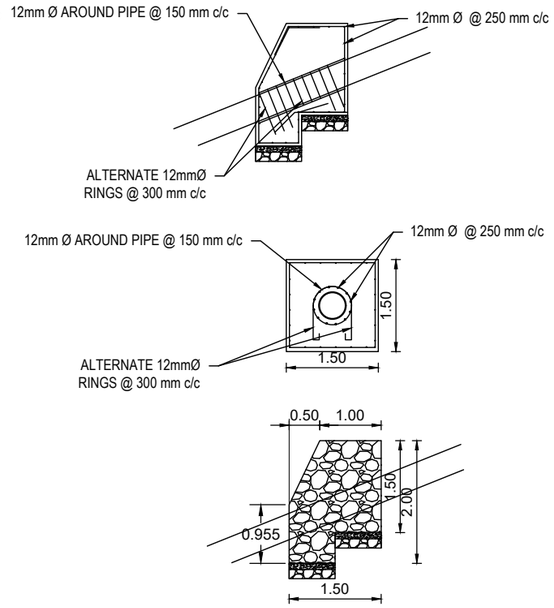

AB-09
SCALE-1:100

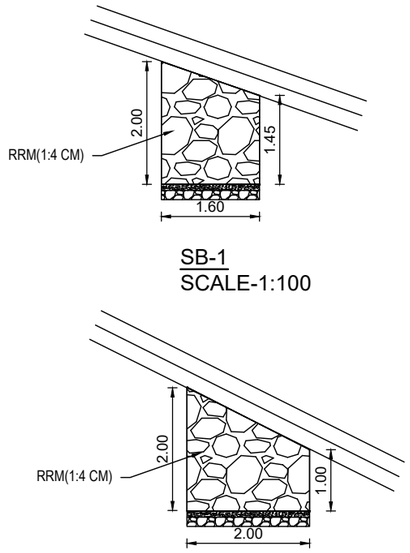

SB-1
SCALE-1:100

SB-2
SCALE-1:100

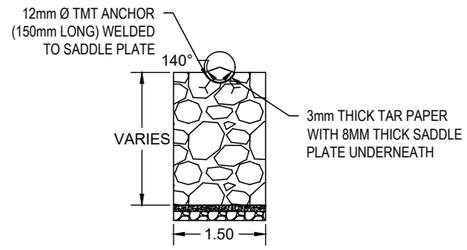

TYPICAL SADDLE SECTION
SCALE-1:100

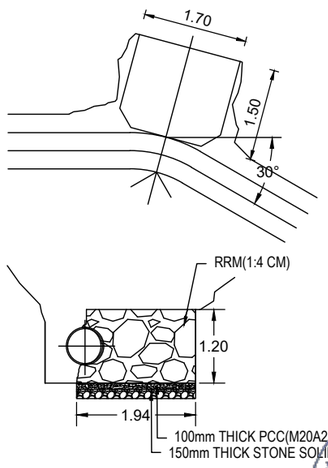

TB1- BELOW 30 °
SCALE-1:100

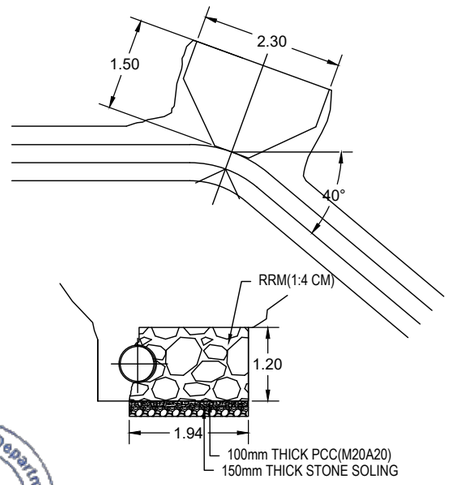

TB 2- BELOW 30°-40°
SCALE-1:100

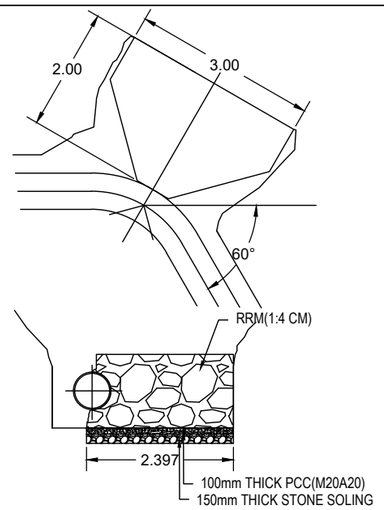

TB 3- BELOW 40°-60°
SCALE-1:100

THRUST BLOCK DETAILS

Projects Contract Department * Contracts Section * DGPC BHUTAN

ISSUED FOR TENDERING

Consultant: DRUK GREEN CONSULTANCY	Owner: DEPARTMENT OF ENERGY, MINISTRY OF ENERGY AND NATURAL RESOURCES
Date: April 2025 / Revised date	Project: **500 kW LUNANA MINI HYDROPOWER PROJECT** GASA, BHUTAN
Designed / Verified	Title: PENSTOCK SUPPORT SYSTEM DETAILS/SADDLE BLOCK AND THRUST BLOCK
Reviewed / Approved	
Drawn / Scale 1:100	Drawing No.
THIS DRAWING IS MEANT FOR FSR NOT TO BE USED FOR CONSTRUCTION.	DGPC/DGC/LMHP/CIVIL-22 Rev. 0

Cad File No: C:\Users\t.chophel3712\Desktop\TAS 2025\Lunana Tender Drawins\Civil\dwg\PENSTOCK_07.04.25.dwg

Apr 21, 2025 - 12:58pm

NOTES:-

1. ALL DIMENSIONS AND LEVELS ARE IN METRES UNLESS OTHERWISE SPECIFIED.
2. NO DIMENSION SHOULD BE MEASURED FROM THE DRAWING.

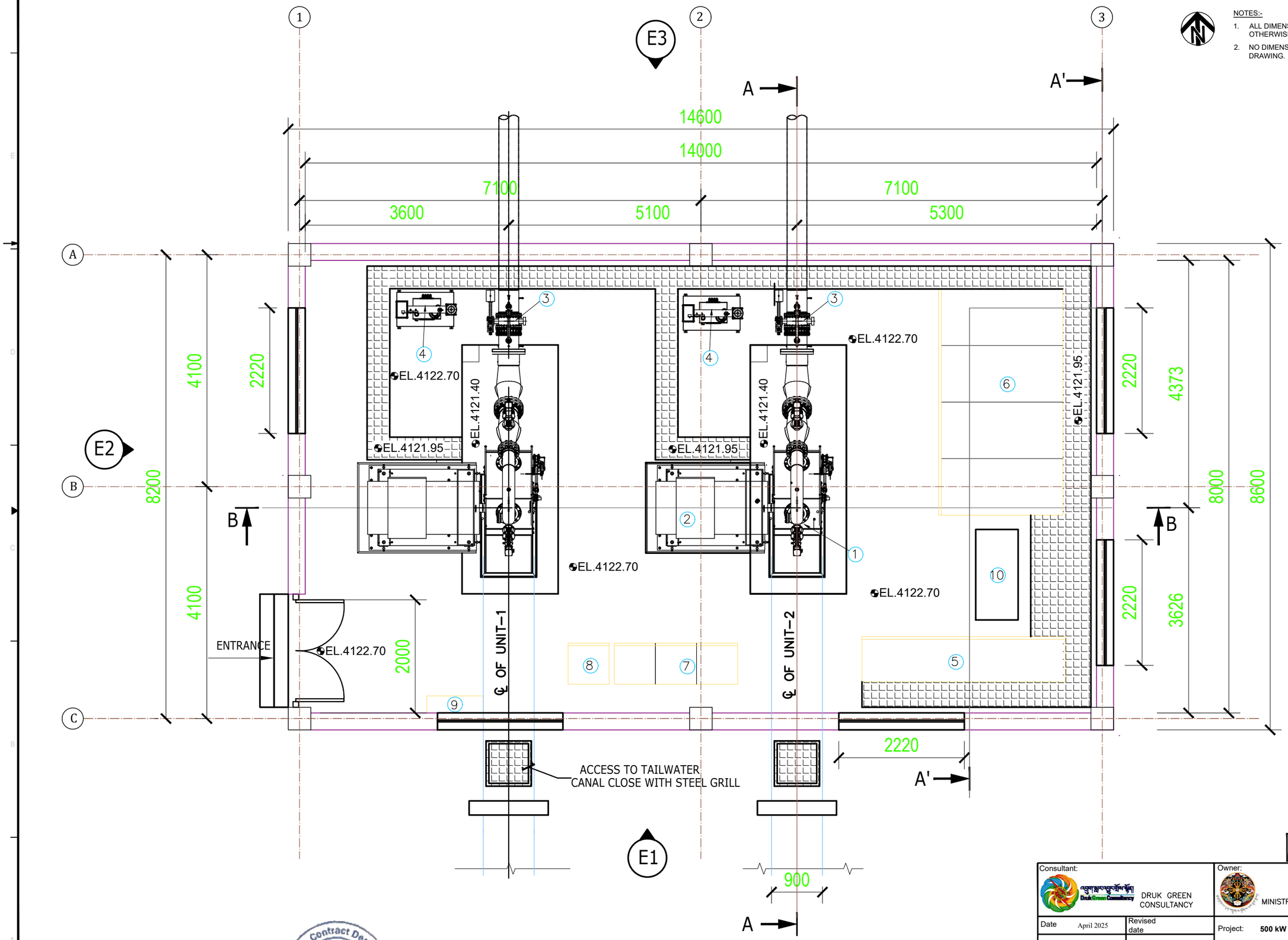

E&M COMPONENTS

1. Turbine Housing
2. Generator
3. MIV
4. Oil Pumping Unit
5. 415V LV Switchgear
6. 33kV MV Switchgear
7. Control Panel
8. Battery Charger
9. Battery
10. DG set 3 Phase 20kVA

MACHINE FLOOR PLAN SHOWING E&M EQUIPMENT

ISSUED FOR TENDERING

Consultant: DRUK GREEN CONSULTANCY	Owner: DEPARTMENT OF ENERGY, MINISTRY OF ENERGY AND NATURAL RESOURCES
Date: April 2025 / Revised date	Project: 500 kW LUNANA MINI HYDROPOWER PROJECT, GASA, BHUTAN
Designed / Verified	Title: POWER HOUSE LAYOUT PLAN
Reviewed / Approved	
Drawn / Scale: NTS	Drawing No.
THIS DRAWING IS MEANT FOR FSR NOT TO BE USED FOR CONSTRUCTION.	DGPC/DGC/LMHP/CIVIL-23 — Rev. 0

Projects & Contract Department * Contracts Section * DGPC BHUTAN

Cad File No: C:\Users\t.chophel3712\Downloads\2 UNIT POWERHOUSE DGW.dwg

Apr 21, 2025 - 12:35pm

NOTES:-

1. ALL DIMENSIONS AND LEVELS ARE IN METRES UNLESS OTHERWISE SPECIFIED.
2. NO DIMENSION SHOULD BE MEASURED FROM THE DRAWING.

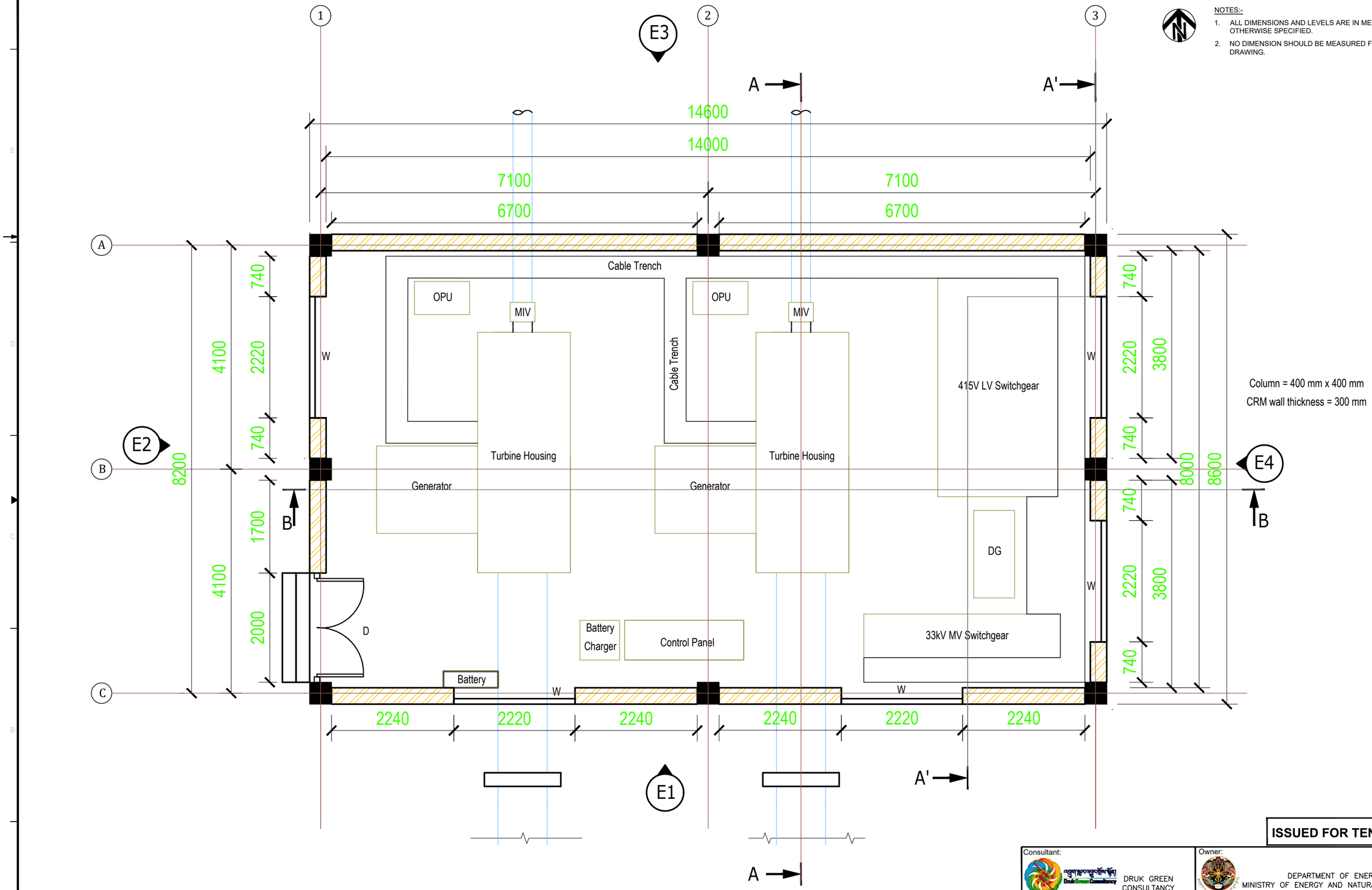

Column = 400 mm x 400 mm

CRM wall thickness = 300 mm

ISSUED FOR TENDERING

MACHINE FLOOR PLAN SHOWING COLUMNS & WALLS

Projects & Contract Department * Contracts Section * DGPC BHUTAN

Consultant: DRUK GREEN CONSULTANCY		Owner: DEPARTMENT OF ENERGY, MINISTRY OF ENERGY AND NATURAL RESOURCES	
Date April 2025	Revised date	Project: 500 kW LUNANA MINI HYDROPOWER PROJECT, GASA, BHUTAN	
Designed	Verified	Title: POWER HOUSE LAYOUT PLAN	
Reviewed	Approved		
Drawn	Scale NTS	Drawing No.	
THIS DRAWING IS MEANT FOR FSR NOT TO BE USED FOR CONSTRUCTION.		DGPC/DGC/LMHP/CIVIL-24	Rev. 0

Cad File No: C:\Users\t.chophel3712\Downloads\2 UNIT POWERHOUSE DGW.dwg

Apr 21, 2025 - 12:36pm

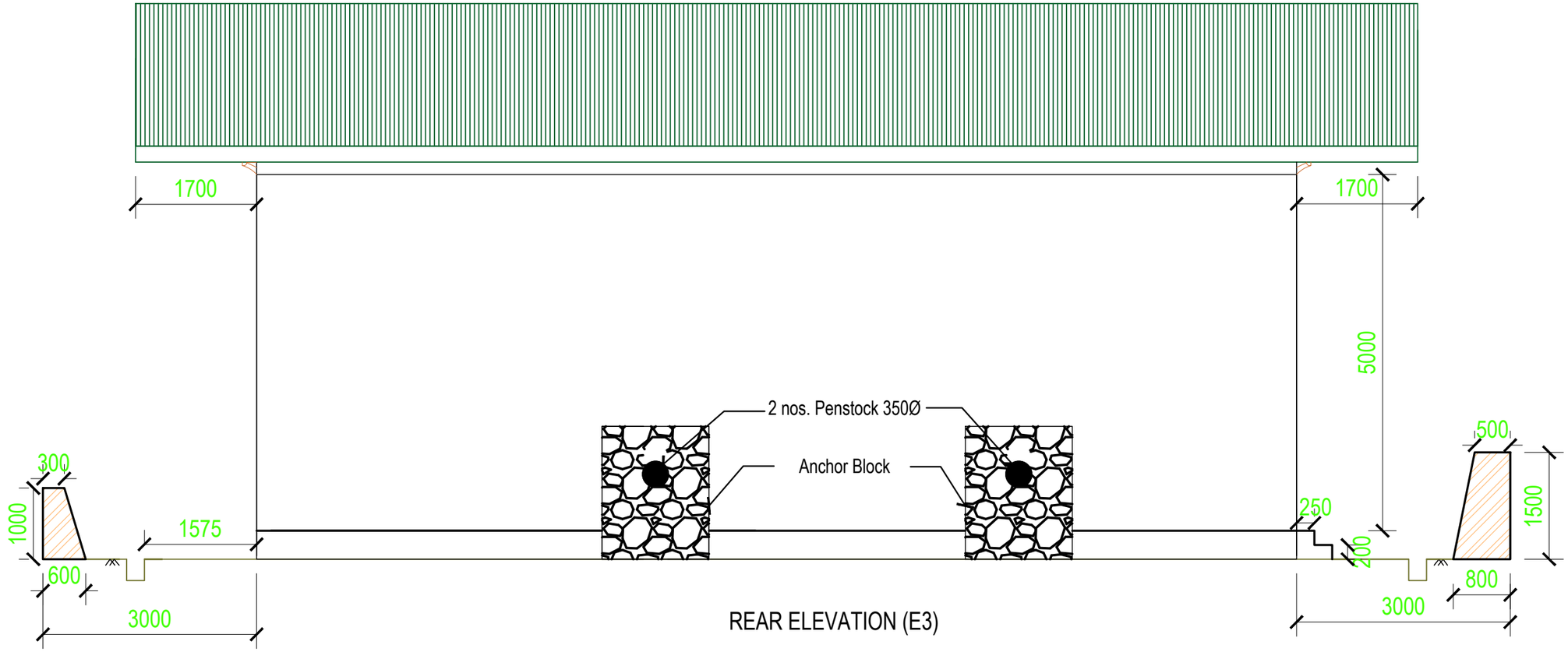

REAR ELEVATION (E3)

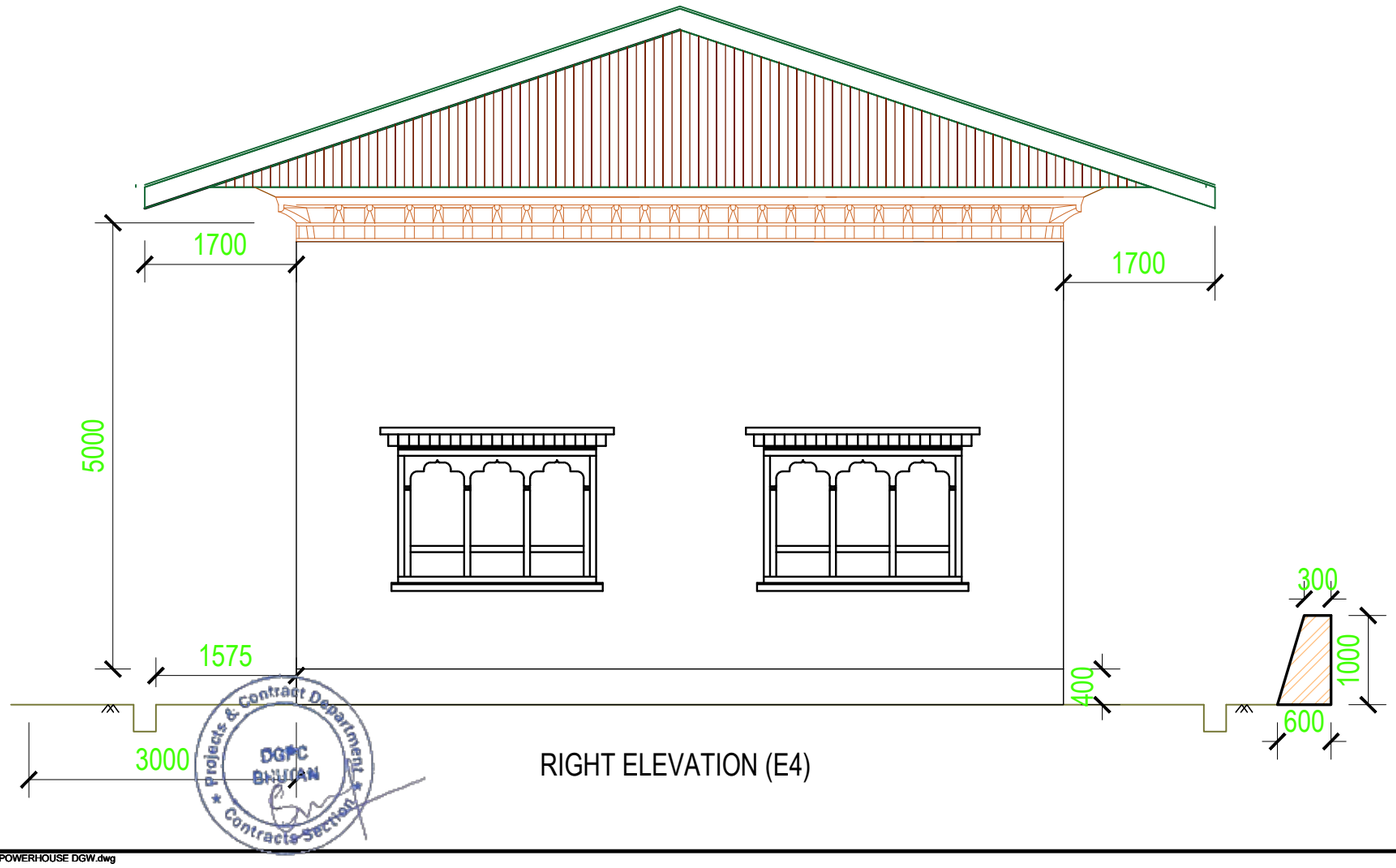

RIGHT ELEVATION (E4)

NOTES:-

1. ALL DIMENSIONS AND LEVELS ARE IN METRES UNLESS OTHERWISE SPECIFIED.
2. NO DIMENSION SHOULD BE MEASURED FROM THE DRAWING.

ISSUED FOR TENDERING

Consultant: DRUK GREEN CONSULTANCY	Owner: DEPARTMENT OF ENERGY, MINISTRY OF ENERGY AND NATURAL RESOURCES
Date April 2025 / Revised date	Project: **500 kW LUNANA MINI HYDROPOWER PROJECT** GASA, BHUTAN
Designed / Verified	Title: POWER HOUSE LAYOUT ELEVATION
Reviewed / Approved	
Drawn / Scale NTS	Drawing No.
THIS DRAWING IS MEANT FOR FSR NOT TO BE USED FOR CONSTRUCTION.	DGPC/DGC/LMHP/CIVIL-25 Rev. 0

Projects & Contract Department * Contracts Section * DGPC BHUTAN

Cad File No: C:\Users\t.chophel3712\Downloads\2 UNIT POWERHOUSE DGW.dwg

Apr 21, 2025 - 12:35pm

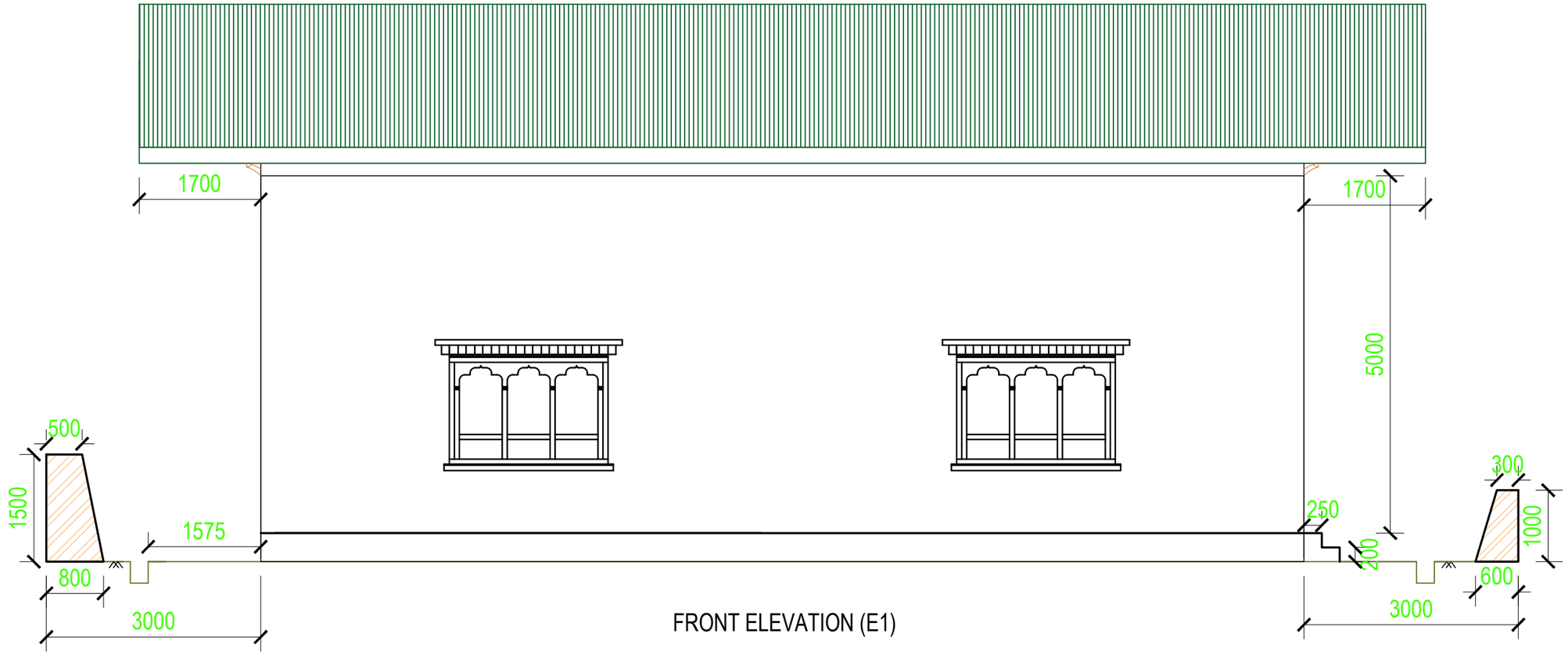

FRONT ELEVATION (E1)

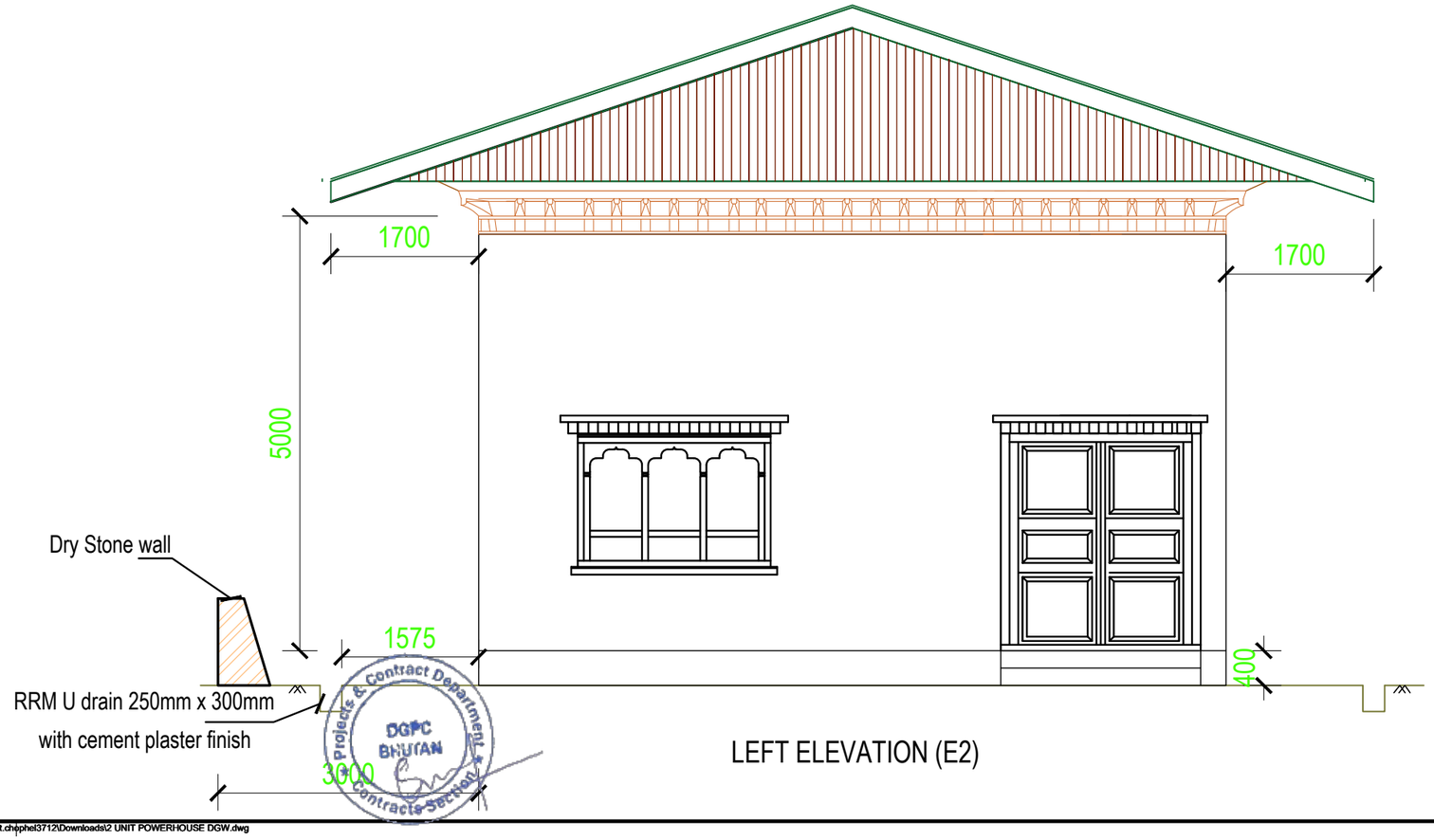

LEFT ELEVATION (E2)

NOTES:-

1. ALL DIMENSIONS AND LEVELS ARE IN METRES UNLESS OTHERWISE SPECIFIED.
2. NO DIMENSION SHOULD BE MEASURED FROM THE DRAWING.

ISSUED FOR TENDERING

Consultant: DRUK GREEN CONSULTANCY	Owner: DEPARTMENT OF ENERGY, MINISTRY OF ENERGY AND NATURAL RESOURCES
Date April 2025 / Revised date	Project: **500 kW LUNANA MINI HYDROPOWER PROJECT** GASA, BHUTAN
Designed / Verified	Title: POWER HOUSE LAYOUT ELEVATION
Reviewed / Approved	
Drawn / Scale NTS	Drawing No.
THIS DRAWING IS MEANT FOR FSR NOT TO BE USED FOR CONSTRUCTION.	DGPC/DGC/LMHP/CIVIL-26 Rev. 0

Projects & Contract Department, DGPC BHUTAN, Contracts Section

Cad File No: C:\Users\t.chophel3712\Downloads\2 UNIT POWERHOUSE DGW.dwg

Apr 21, 2025 - 12:35pm

NOTES:-

1. ALL DIMENSIONS AND LEVELS ARE IN METRES UNLESS OTHERWISE SPECIFIED.
2. NO DIMENSION SHOULD BE MEASURED FROM THE DRAWING.

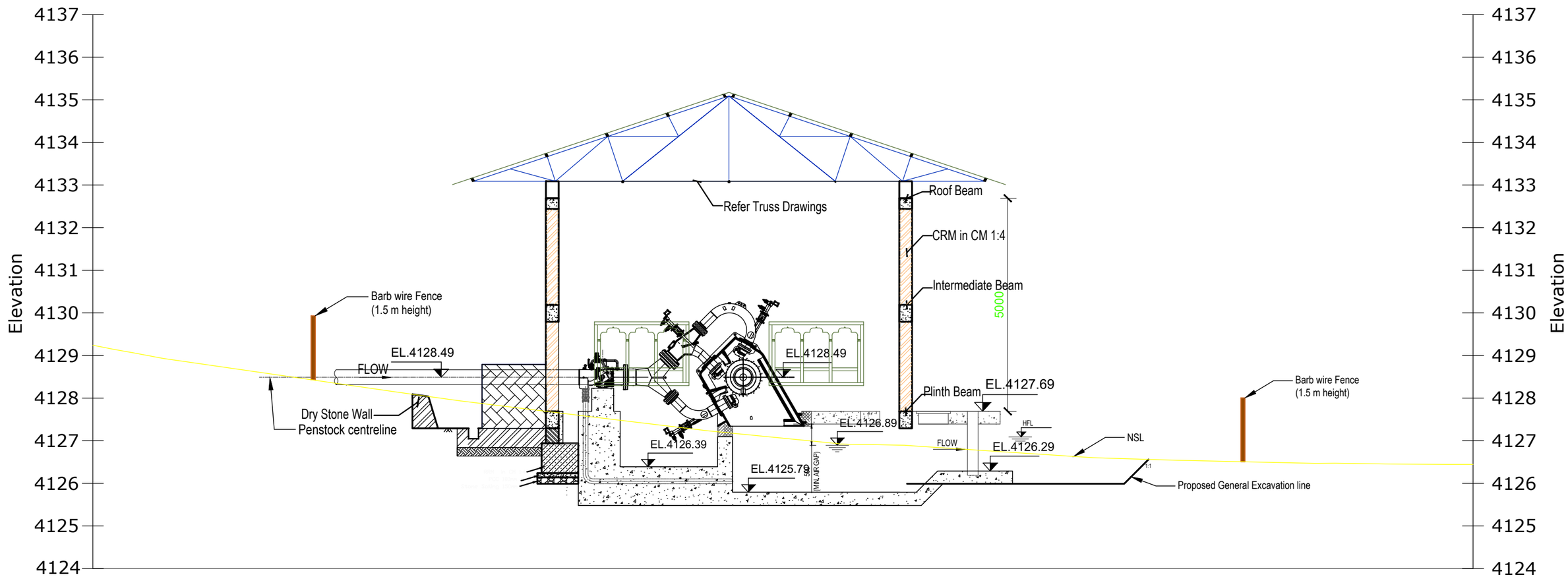

SECTION A-A

ISSUED FOR TENDERING

Consultant: DRUK GREEN CONSULTANCY	Owner: DEPARTMENT OF ENERGY, MINISTRY OF ENERGY AND NATURAL RESOURCES
Date: April 2025 / Revised date	Project: **500 kW LUNANA MINI HYDROPOWER PROJECT**, GASA, BHUTAN
Designed / Verified	Title: POWER HOUSE LAYOUT SECTION
Reviewed / Approved	
Drawn / Scale: NTS	Drawing No.
THIS DRAWING IS MEANT FOR FSR NOT TO BE USED FOR CONSTRUCTION.	DGPC/DGC/LMHP/CIVIL-27 — Rev. 0

Projects & Contract Department — DGPC BHUTAN — Contracts Section

Cad File No: C:\Users\t.chophel3712\Downloads\2 UNIT POWERHOUSE DGW.dwg

Apr 21, 2025 - 12:35pm

NOTES:-

1. ALL DIMENSIONS AND LEVELS ARE IN METRES UNLESS OTHERWISE SPECIFIED.
2. NO DIMENSION SHOULD BE MEASURED FROM THE DRAWING.

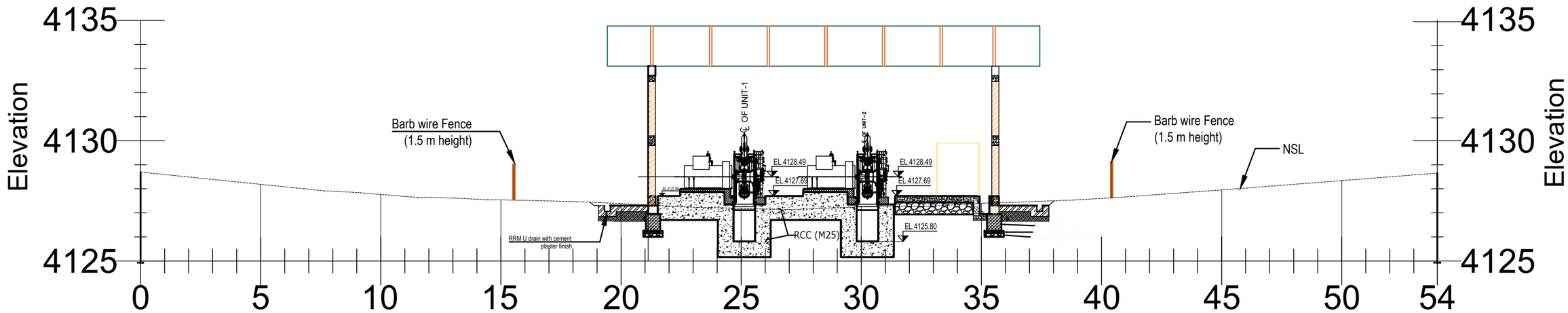

SECTION B-B

ISSUED FOR TENDERING

Consultant: DRUK GREEN CONSULTANCY	Owner: DEPARTMENT OF ENERGY, MINISTRY OF ENERGY AND NATURAL RESOURCES
Date April 2025 / Revised date	Project: **500 kW LUNANA MINI HYDROPOWER PROJECT** GASA, BHUTAN
Designed / Verified	Title: POWER HOUSE LAYOUT SECTION
Reviewed / Approved	
Drawn / Scale NTS	Drawing No.
THIS DRAWING IS MEANT FOR FSR NOT TO BE USED FOR CONSTRUCTION.	DGPC/DGC/LMHP/CIVIL-28 Rev. 0

Projects & Contract Department * DGPC BHUTAN * Contracts Section

Cad File No: C:\Users\t.chophel3712\Downloads\2 UNIT POWERHOUSE DGW.dwg

Apr 21, 2025 - 12:36pm

NOTES:-

1. ALL DIMENSIONS AND LEVELS ARE IN METRES UNLESS OTHERWISE SPECIFIED.
2. NO DIMENSION SHOULD BE MEASURED FROM THE DRAWING.

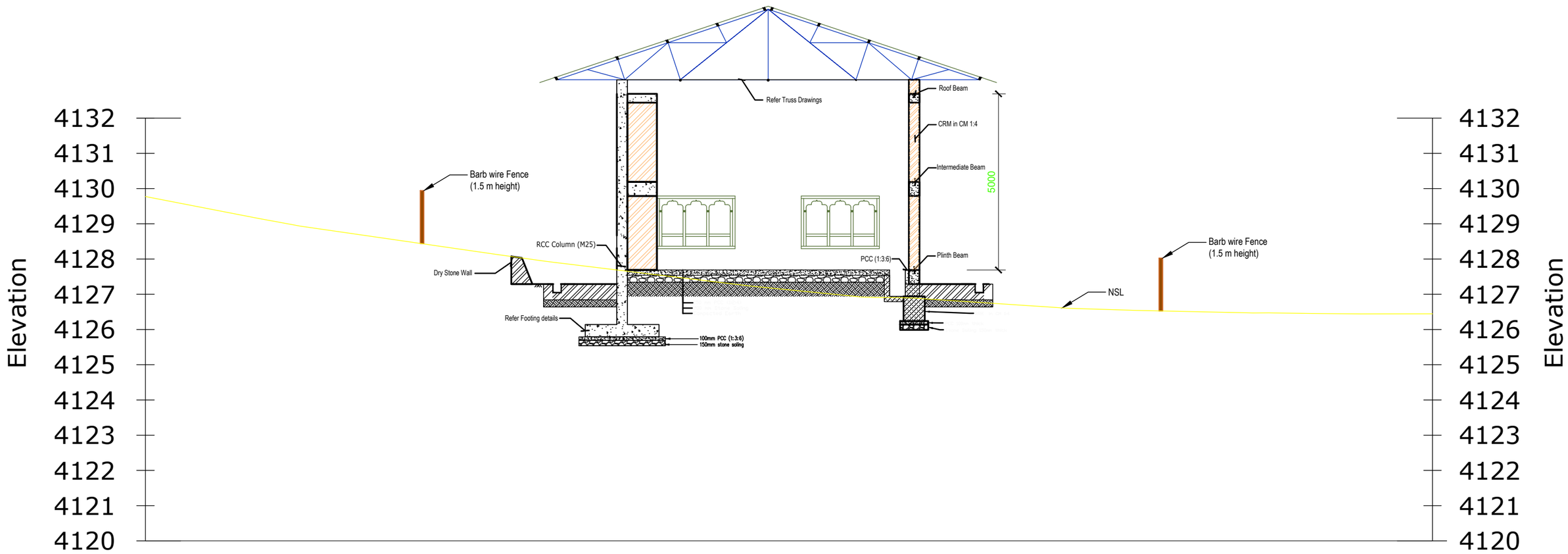

SECTION A'A'

ISSUED FOR TENDERING

Consultant: DRUK GREEN CONSULTANCY	Owner: DEPARTMENT OF ENERGY, MINISTRY OF ENERGY AND NATURAL RESOURCES
Date April 2025 / Revised date	Project: **500 kW LUNANA MINI HYDROPOWER PROJECT** GASA, BHUTAN
Designed / Verified	Title: POWER HOUSE LAYOUT SECTION
Reviewed / Approved	
Drawn / Scale NTS	Drawing No.
THIS DRAWING IS MEANT FOR FSR NOT TO BE USED FOR CONSTRUCTION.	DGPC/DGC/LMHP/CIVIL-29 Rev. 0

Projects & Contract Department DGPC BHUTAN Contracts Section

Cad File No: C:\Users\t.chophel3712\Downloads\2 UNIT POWERHOUSE DGW.dwg

Apr 21, 2025 - 12:35pm

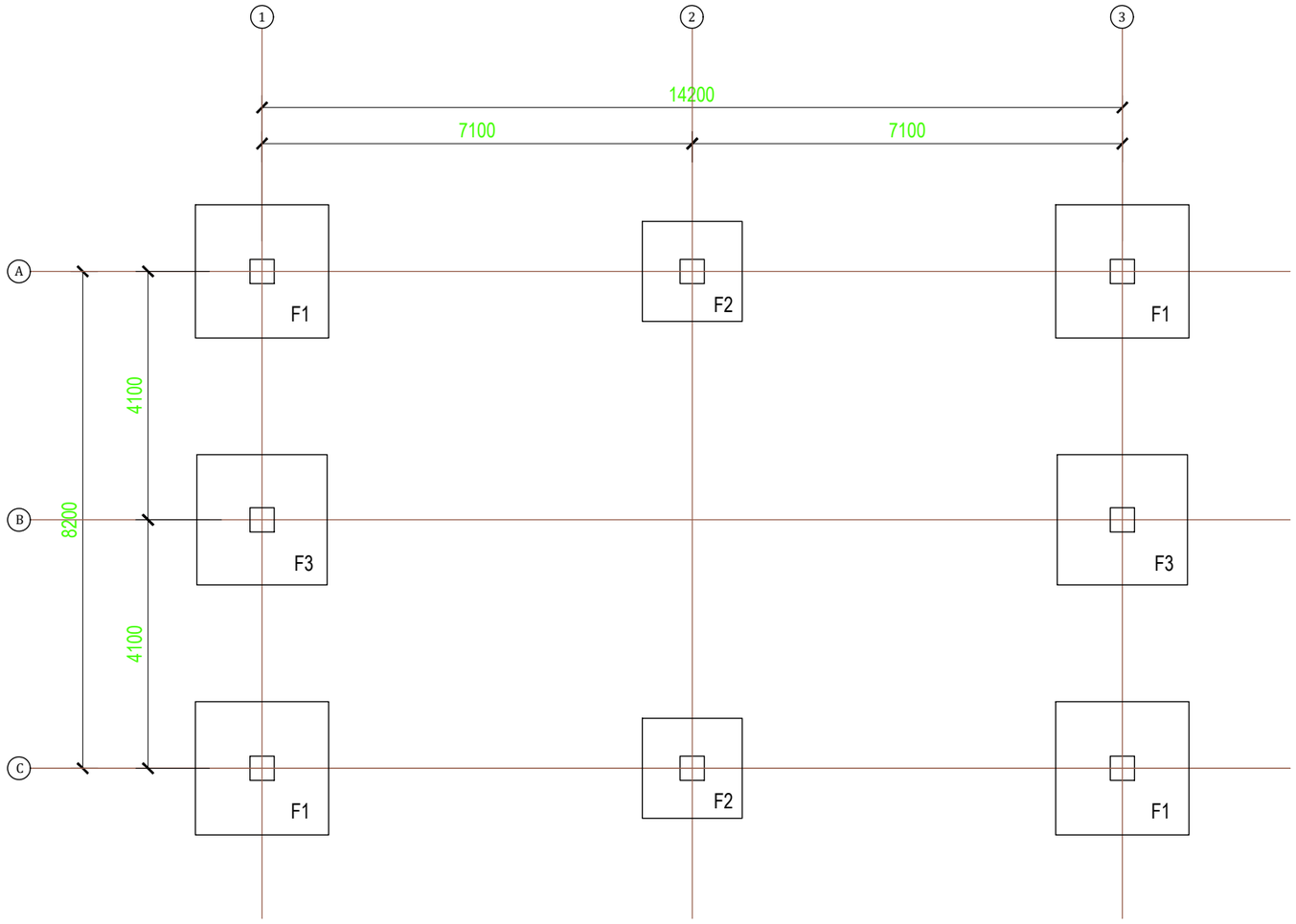

FOOTING LAYOUT PLAN

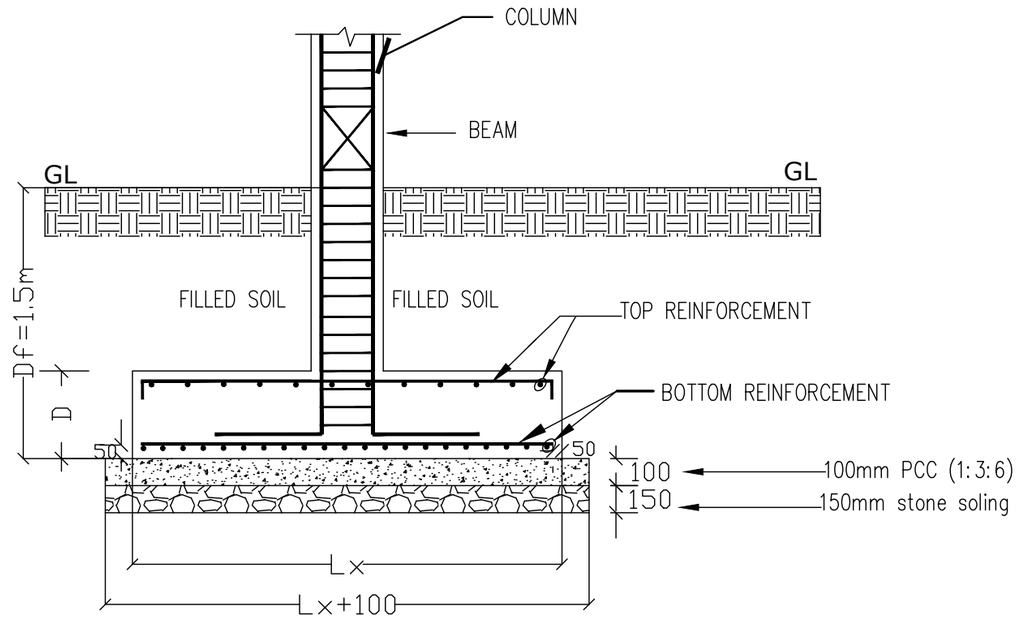

SECTIONAL ELEVATION FOR FOOTING

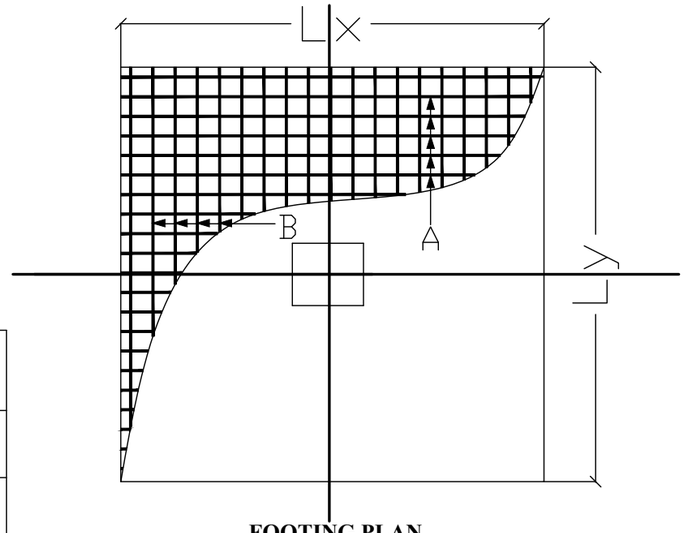

FOOTING PLAN

SCHEDULE FOR FOOTING

FOOTING NO.	FOOTING TYPE	Lx	Ly	D	TOP STEEL		BOTTOM STEEL		DEPTH OF FOUNDATION (Df)
					A	B	A	B	
F1	ISOLATED FOOTING	2200	2200	400	12TMT @ 180 C/C	12TMT @ 180 C/C	12TMT @ 200 C/C	12TMT @ 200 C/C	1500
F2	ISOLATED FOOTING	1650	1650	450	12TMT @ 150 C/C	12TMT @ 150 C/C	12TMT @ 180 C/C	12TMT @ 180 C/C	1500
F3	ISOLATED FOOTING	2150	2150	400	12TMT @ 180 C/C	12TMT @ 180 C/C	12TMT @ 200 C/C	12TMT @ 200 C/C	1500

NOTES:-

1. ALL DIMENSIONS AND LEVELS ARE IN METRES UNLESS OTHERWISE SPECIFIED.
2. NO DIMENSION SHOULD BE MEASURED FROM THE DRAWING.

Projects & Contract Department * DGPC BHUTAN * Contracts Section

ISSUED FOR TENDERING

Consultant: DRUK GREEN CONSULTANCY	Owner: DEPARTMENT OF ENERGY, MINISTRY OF ENERGY AND NATURAL RESOURCES
Date April 2025 / Revised date	Project: 500 kW LUNANA MINI HYDROPOWER PROJECT, GASA, BHUTAN
Designed / Verified	Title: POWER HOUSE FOOTING DETAILS (RCC FRAME)
Reviewed / Approved	
Drawn / Scale NTS	Drawing No.
THIS DRAWING IS MEANT FOR FSR NOT TO BE USED FOR CONSTRUCTION.	DGPC/DGC/LMHP/CIVIL-30 Rev. 0

Cad File No: C:\Users\t.chophel3712\Downloads\2 UNIT POWERHOUSE DGW.dwg

Apr 21, 2025 - 12:35pm

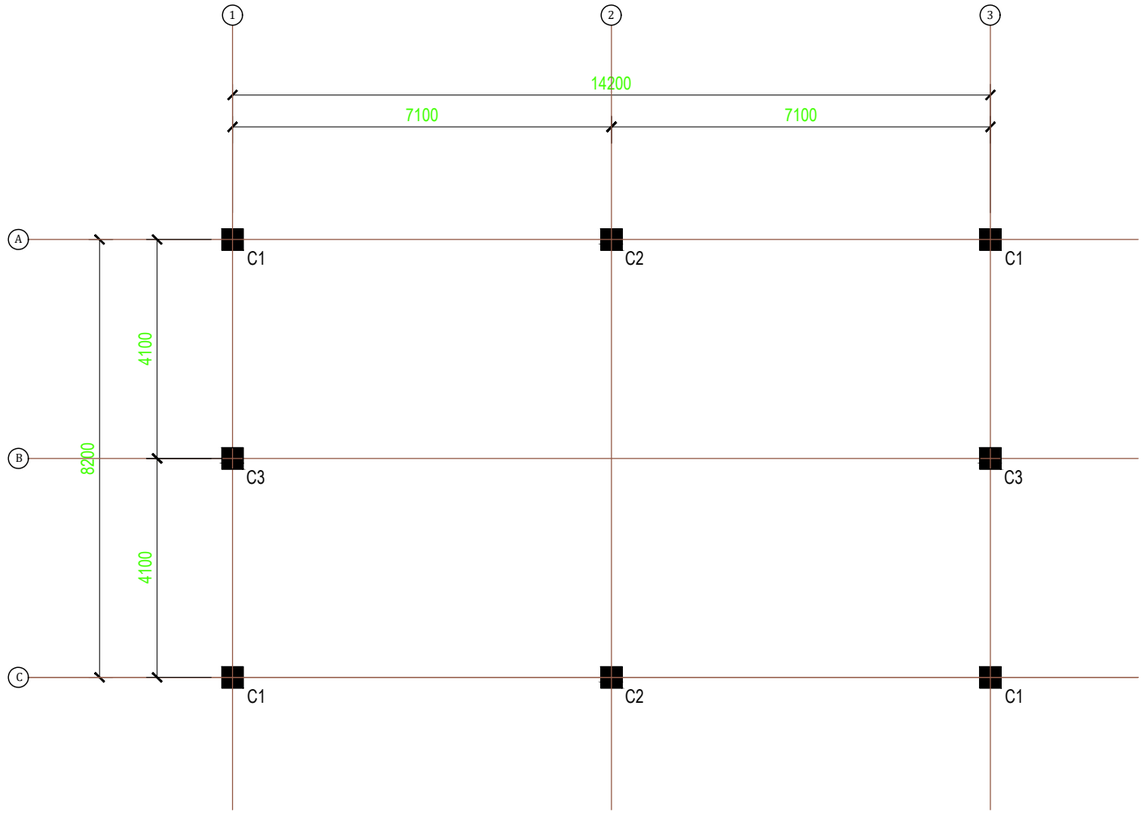

COLUMN LAYOUT PLAN

TABLE OF COLUMN REINFORCEMENT

SL.NO.	COLUMN	SIZE (mmXmm)	REINFORCEMENT			SECTIONS	SHAPE OF STIRRUPS
			LONGITUDINAL	TIES			
				ALONG 'a'	ALONG 'b'		
1	C1	400 x 400	25 TMT, 4 NOS	8 TMT @ 100 C/C	8 TMT @ 150 C/C	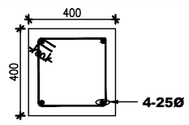	
2	C2	400 x 400	20 TMT, 8 NOS	8 TMT @ 100 C/C	8 TMT @ 150 C/C	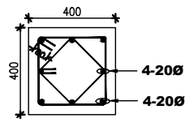	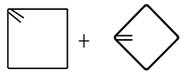
3	C3	400 x 400	20 TMT, 4 NOS	8 TMT @ 100 C/C	8 TMT @ 150 C/C	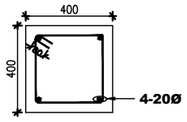	

NOTES:-

1. ALL DIMENSIONS AND LEVELS ARE IN METRES UNLESS OTHERWISE SPECIFIED.
2. NO DIMENSION SHOULD BE MEASURED FROM THE DRAWING.

Projects & Contract Department * Contracts Section * DGPC BHUTAN

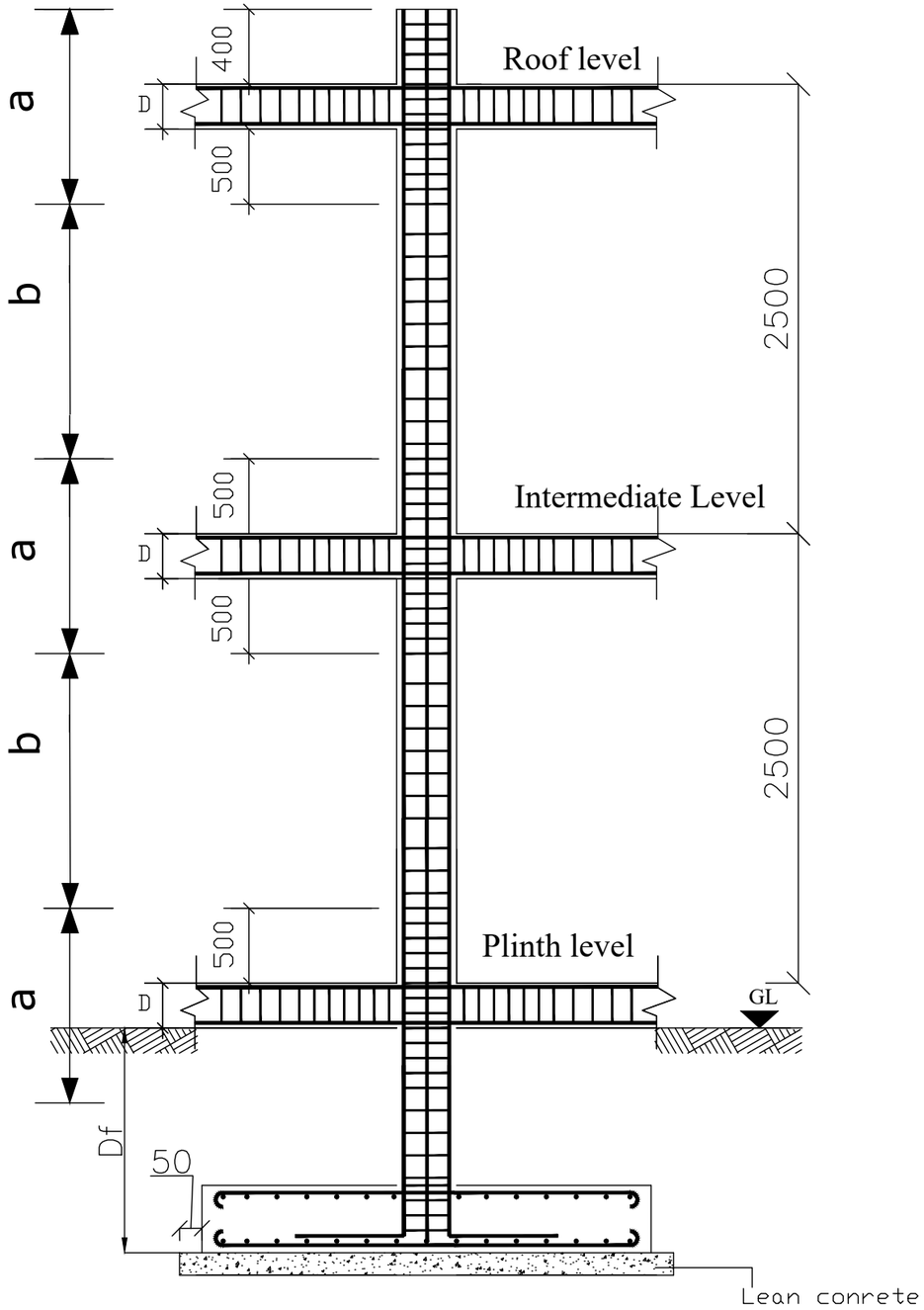

SECTIONAL DETAILS FOR COLUMN

ISSUED FOR TENDERING

Consultant: DRUK GREEN CONSULTANCY	Owner: DEPARTMENT OF ENERGY, MINISTRY OF ENERGY AND NATURAL RESOURCES
Date April 2025 / Revised date	Project: 500 kW LUNANA MINI HYDROPOWER PROJECT, GASA, BHUTAN
Designed / Verified	Title: POWER HOUSE COLUMN DETAILS
Reviewed / Approved	
Drawn / Scale NTS	Drawing No.
THIS DRAWING IS MEANT FOR FSR NOT TO BE USED FOR CONSTRUCTION.	DGPC/DGC/LMHP/CIVIL-31 Rev. 0

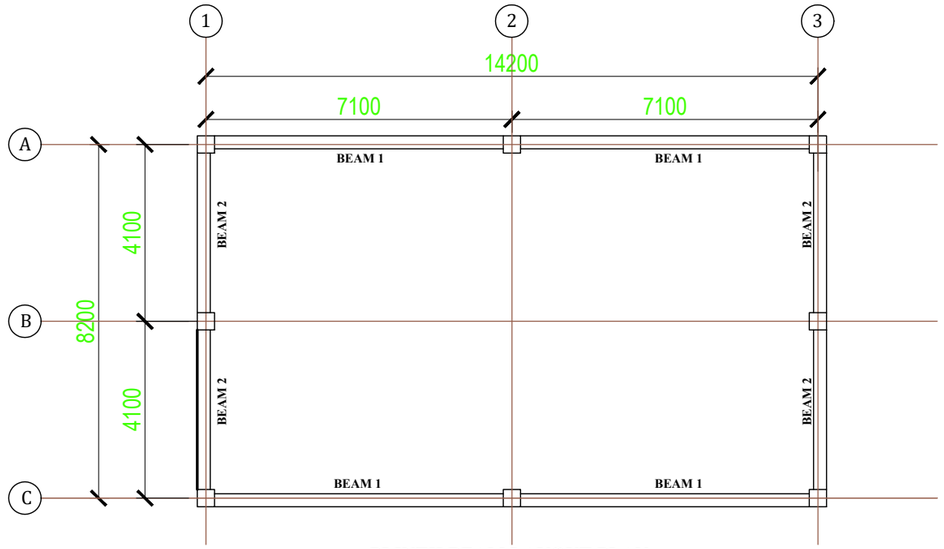

PLINTH BEAM LAYOUT PLAN

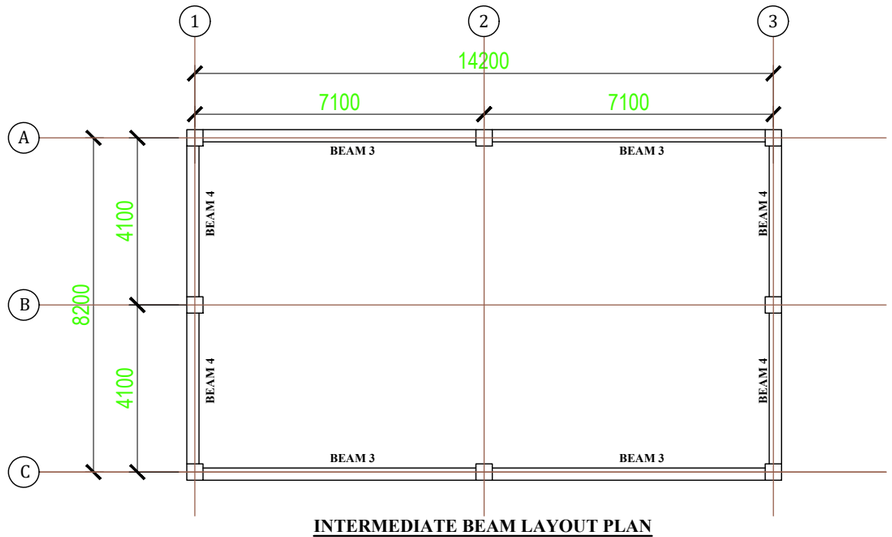

INTERMEDIATE BEAM LAYOUT PLAN

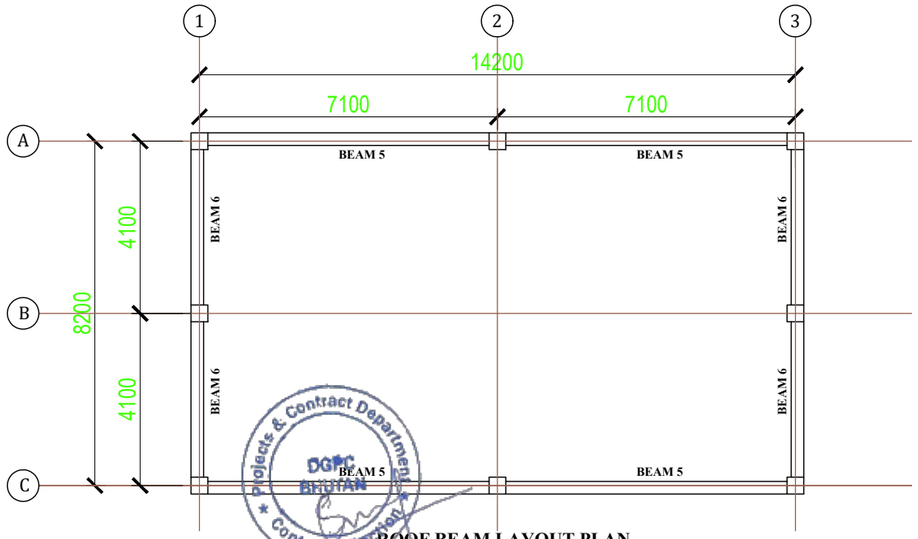

ROOF BEAM LAYOUT PLAN

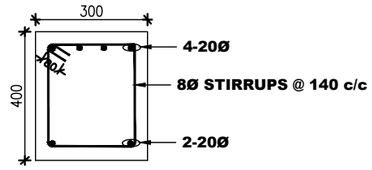

SECTION AT SUPPORT

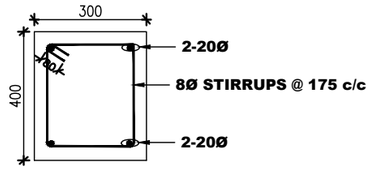

SECTION AT MID SPAN

BEAM 1

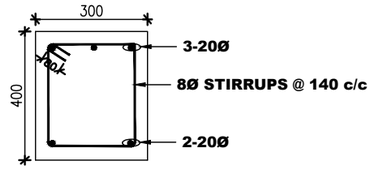

SECTION AT SUPPORT

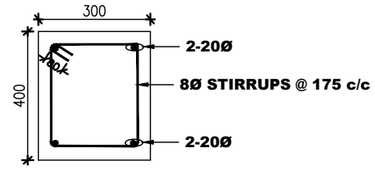

SECTION AT MID SPAN

BEAM 2

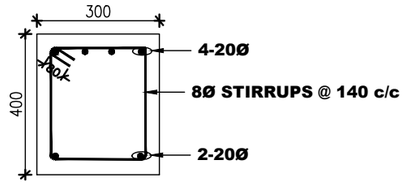

SECTION AT SUPPORT

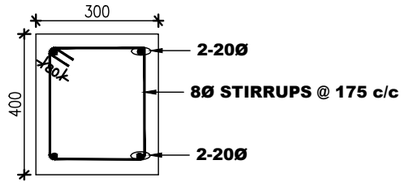

SECTION AT MID SPAN

BEAM 3

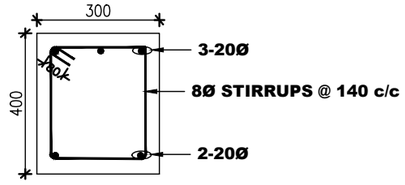

SECTION AT SUPPORT

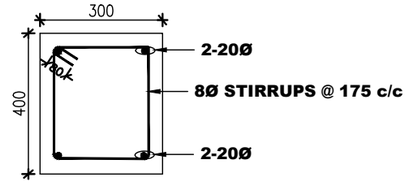

SECTION AT MID SPAN

BEAM 4

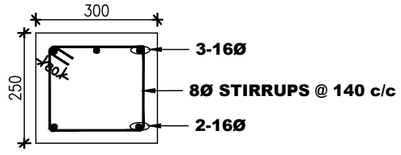

SECTION AT SUPPORT

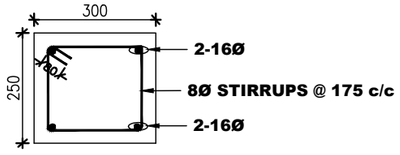

SECTION AT MID SPAN

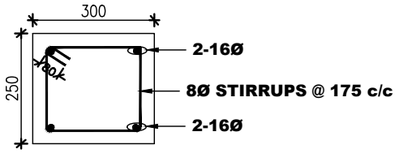

BEAM 6: SECTION AT MID SPAN

BEAM 5

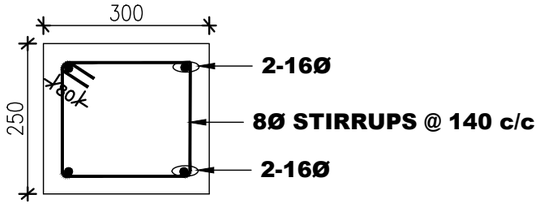

BEAM 6: SECTION AT SUPPORT

NOTES:-

1. ALL DIMENSIONS AND LEVELS ARE IN METRES UNLESS OTHERWISE SPECIFIED.
2. NO DIMENSION SHOULD BE MEASURED FROM THE DRAWING.

ISSUED FOR TENDERING

Consultant: DRUK GREEN CONSULTANCY	Owner: DEPARTMENT OF ENERGY, MINISTRY OF ENERGY AND NATURAL RESOURCES
Date: April 2025 / Revised date	Project: 500 kW LUNANA MINI HYDROPOWER PROJECT, GASA, BHUTAN
Designed / Verified	Title: POWER HOUSE BEAM DETAILS
Reviewed / Approved	
Drawn / Scale: NTS	Drawing No.
THIS DRAWING IS MEANT FOR FSR NOT TO BE USED FOR CONSTRUCTION.	DGPC/DGC/LMHP/CIVIL-32 — Rev. 0

Projects & Contract Department DGPC BHUTAN Contracts Section

NOTES:-

1. ALL DIMENSIONS AND LEVELS ARE IN METRES UNLESS OTHERWISE SPECIFIED.
2. NO DIMENSION SHOULD BE MEASURED FROM THE DRAWING.

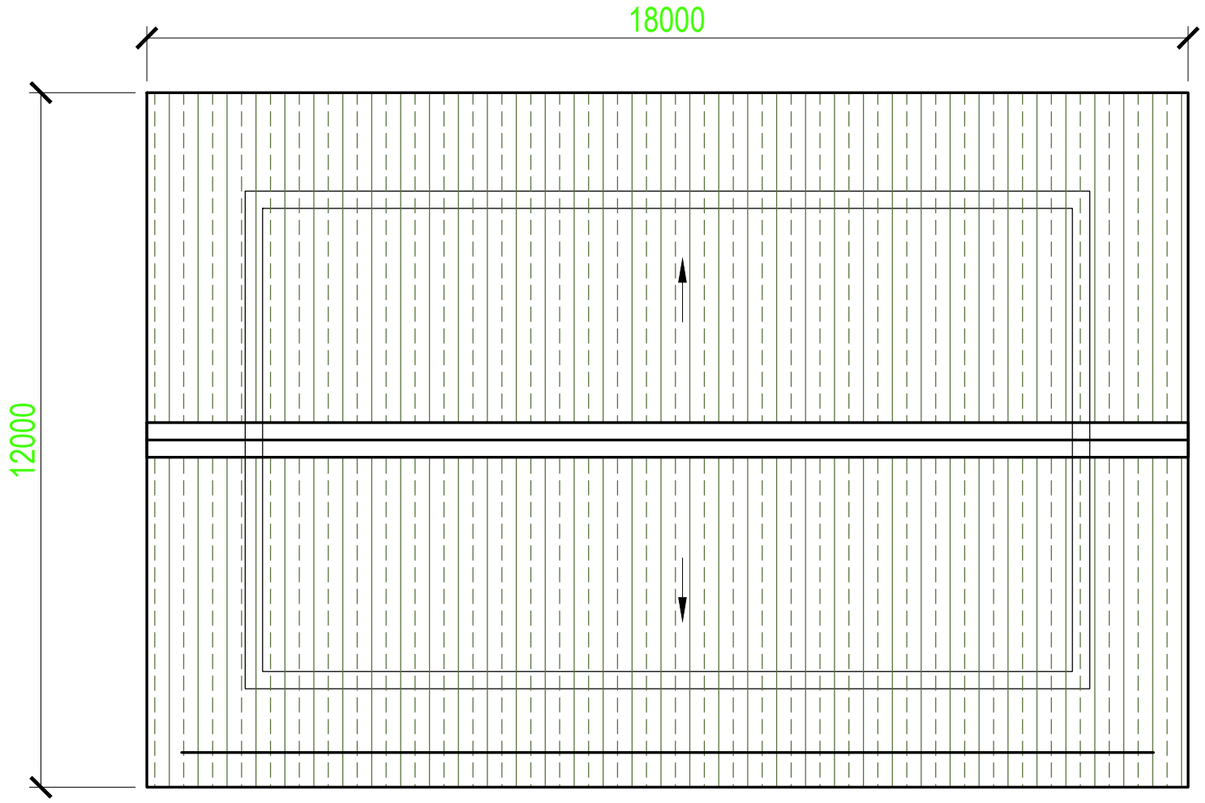

PPGI SHEET LAYOUT PLAN

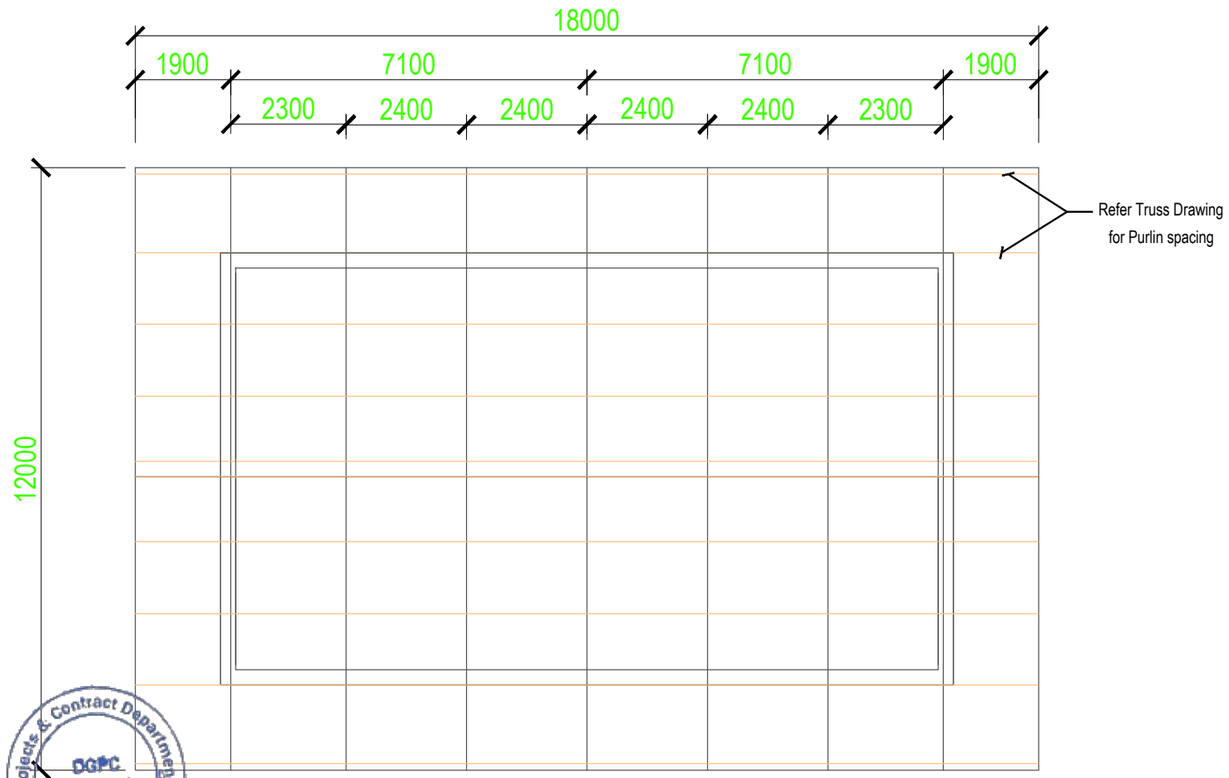

PURLIN LAYOUT PLAN

Projects & Contract Department
DGPC BHUTAN
Contracts Section

ISSUED FOR TENDERING

Consultant: DRUK GREEN CONSULTANCY	Owner: DEPARTMENT OF ENERGY, MINISTRY OF ENERGY AND NATURAL RESOURCES
Date April 2025 / Revised date	Project: **500 kW LUNANA MINI HYDROPOWER PROJECT** GASA, BHUTAN
Designed / Verified	Title: POWER HOUSE TRUSS DETAILS
Reviewed / Approved	
Drawn / Scale NTS	Drawing No.
THIS DRAWING IS MEANT FOR FSR NOT TO BE USED FOR CONSTRUCTION.	DGPC/DGC/LMHP/CIVIL-33 Rev. 0

Cad File No: C:\Users\t.chophel3712\Downloads\2 UNIT POWERHOUSE DGW.dwg

Apr 21, 2025 - 12:35pm

NOTES:-

1. ALL DIMENSIONS AND LEVELS ARE IN METRES UNLESS OTHERWISE SPECIFIED.
2. NO DIMENSION SHOULD BE MEASURED FROM THE DRAWING.

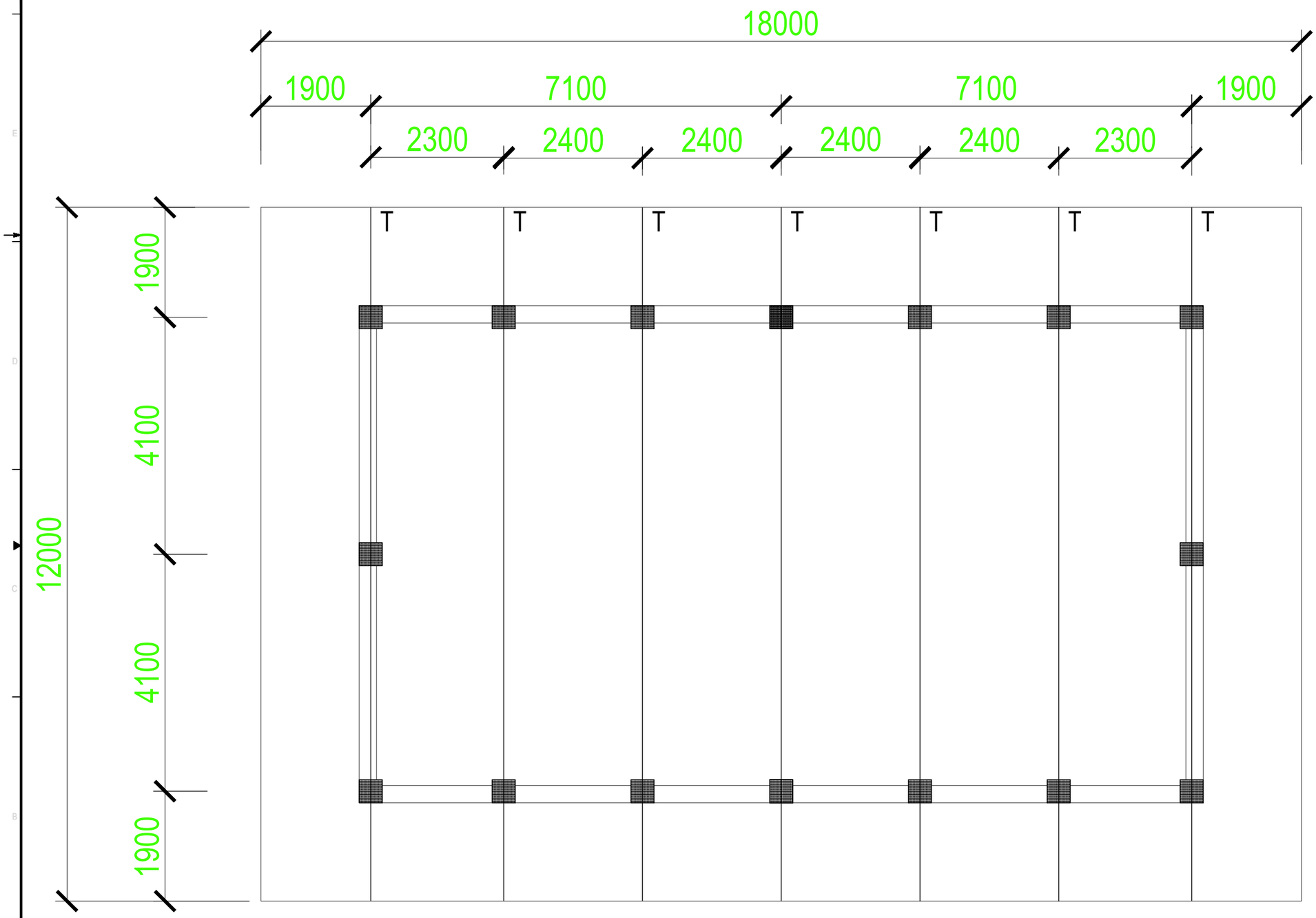

TRUSS & PROP LAYOUT PLAN

ISSUED FOR TENDERING

Projects & Contract Department * Contracts Section * DGPC BHUTAN

Consultant: DRUK GREEN CONSULTANCY		Owner: DEPARTMENT OF ENERGY, MINISTRY OF ENERGY AND NATURAL RESOURCES	
Date April 2025	Revised date	Project: **500 kW LUNANA MINI HYDROPOWER PROJECT** GASA, BHUTAN	
Designed	Verified	Title: POWER HOUSE TRUSS DETAILS	
Reviewed	Approved		
Drawn	Scale NTS	Drawing No.	
THIS DRAWING IS MEANT FOR FSR NOT TO BE USED FOR CONSTRUCTION.		DGPC/DGC/LMHP/CIVIL-34	Rev. 0

NOTES:-

1. ALL DIMENSIONS AND LEVELS ARE IN METRES UNLESS OTHERWISE SPECIFIED.
2. NO DIMENSION SHOULD BE MEASURED FROM THE DRAWING.

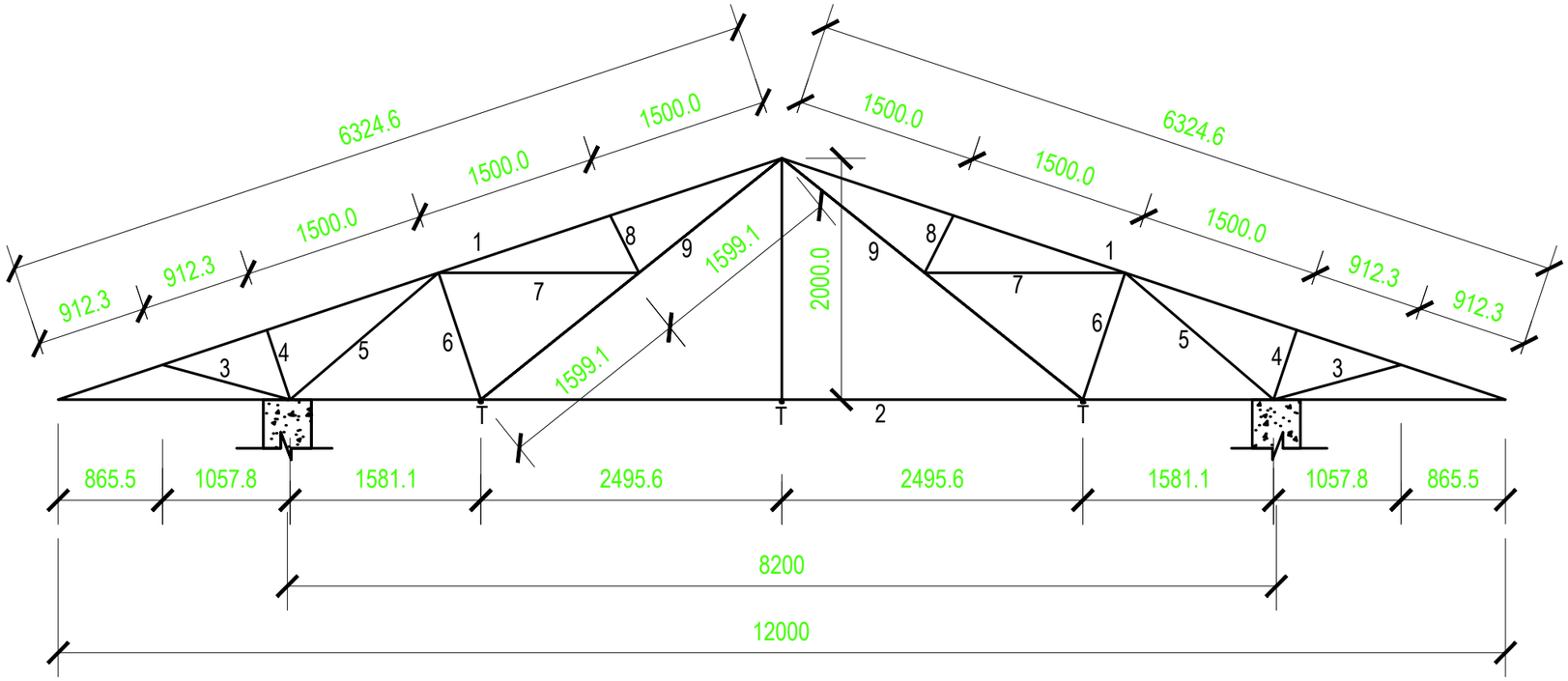

TRUSS 'T'

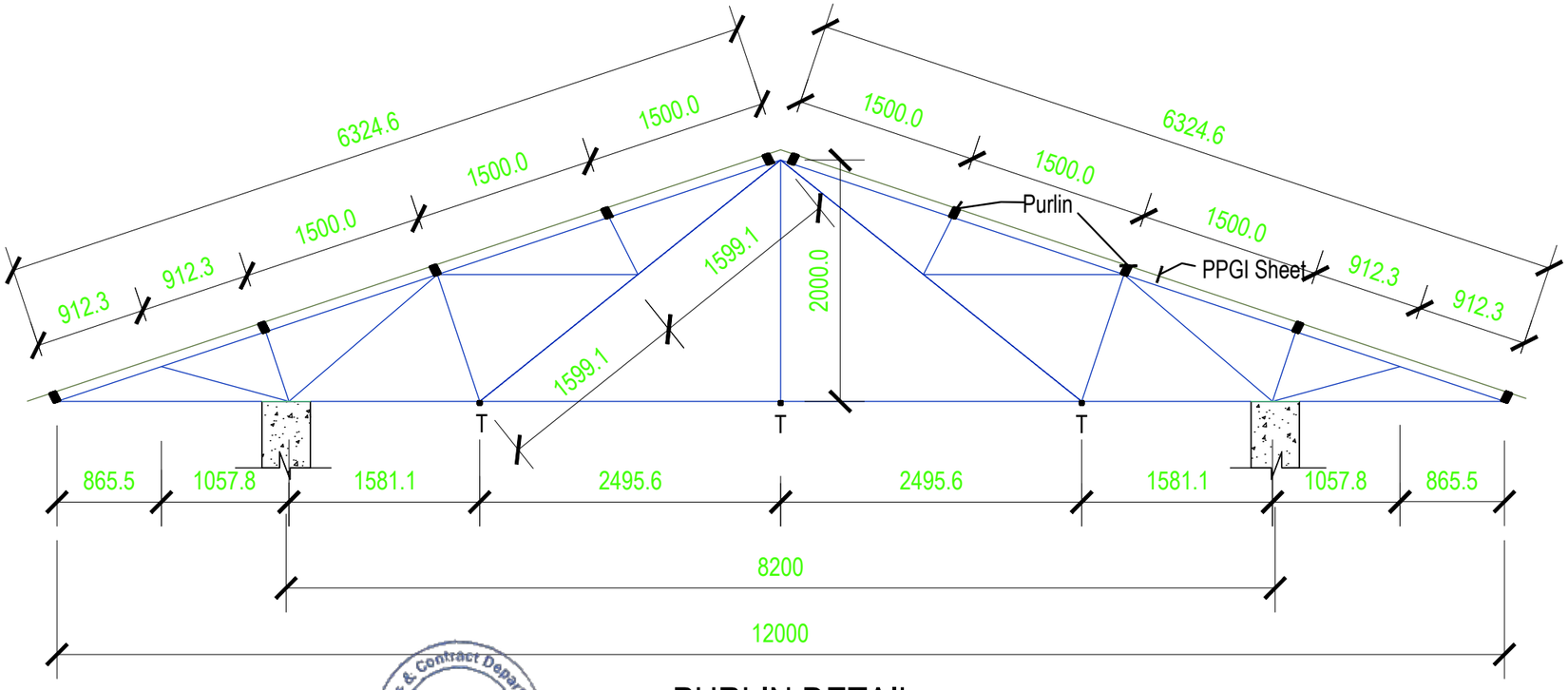

PURLIN DETAIL

TRUSS MEMBER DETAILS

MEM NO.	SECTION (mmxmmxmm)	TOTAL	UNIT
1	50x50x2.9	52.12	kg
2	96x48x4.0	98.64	kg
3	25x25x2.6	3.71	kg
4	25x25x2.6	2.06	kg
5	32x32x2.6	7.32	kg
6	25x25x2.6	3.75	kg
7	32x32x2.6	7.23	kg
8	25x25x2.6	1.88	kg
9	66x33x3.6	31.55	kg
10	25x25x2.6	3.38	kg
	TOTAL	211.64	kg

Truss Material: TATA Stuctura Hollow Steel Section (YST 310 grade)

MEM	SECTION (mmxmmxmm)	WEIGHT
Tie Runner (T)	SHS 25x25x2.6	1.69 kg/m
Purlins	RHS 80x40x2.6	4.55 kg/m

ISSUED FOR TENDERING

Consultant: DRUK GREEN CONSULTANCY

Owner: DEPARTMENT OF ENERGY, MINISTRY OF ENERGY AND NATURAL RESOURCES

Date April 2025	Revised date
Designed	Verified
Reviewed	Approved
Drawn	Scale NTS

Project: **500 kW LUNANA MINI HYDROPOWER PROJECT** GASA, BHUTAN

Title: POWER HOUSE TRUSS DETAILS

Drawing No. DGPC/DGC/LMHP/CIVIL-35 Rev. 0

THIS DRAWING IS MEANT FOR FSR NOT TO BE USED FOR CONSTRUCTION.

Projects & Contract Department DGPC BHUTAN Contracts Section

Cad File No: C:\Users\t.chophel3712\Downloads\2 UNIT POWERHOUSE DGW.dwg

Apr 21, 2025 - 12:35pm

NOTES:-

1. ALL DIMENSIONS AND LEVELS ARE IN METRES UNLESS OTHERWISE SPECIFIED.
2. NO DIMENSION SHOULD BE MEASURED FROM THE DRAWING.

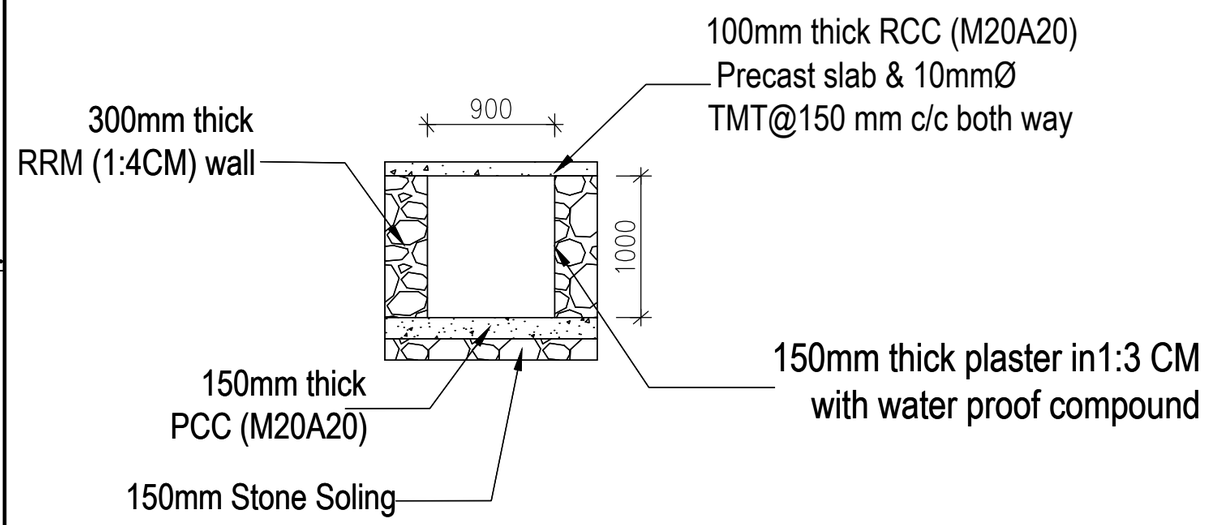

Typical Unit TRC Section

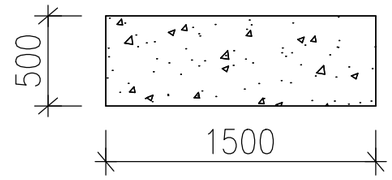

Unit TRC Precast Slab: Plan

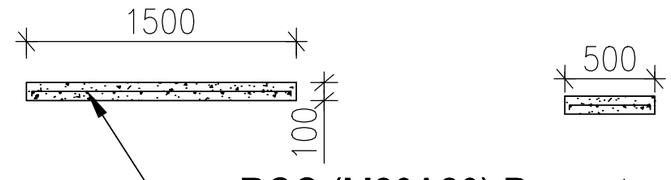

RCC (M20A20) Precast Slab with 10mmØ TMT @150 mm c/c both way

Unit TRC Precast Slab: Section

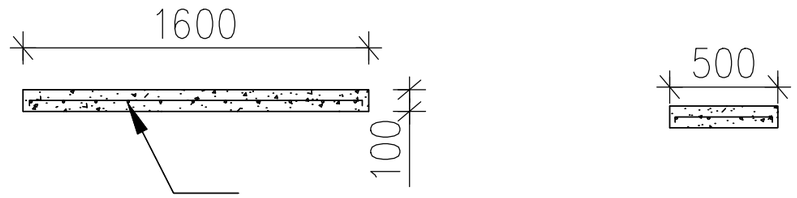

RCC (M20A20) Precast Slab with 10mmØ TMT@150 mm c/c both way

Main TRC Precast Slab: Section

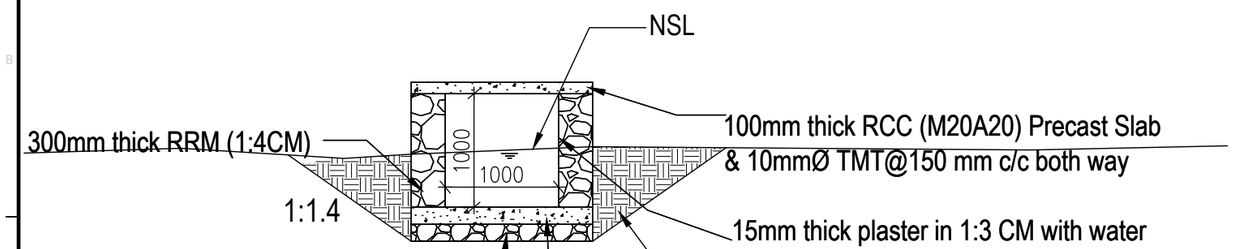

Typical Main TRC Section

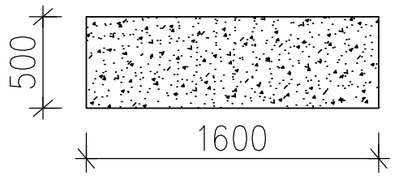

Main TRC Precast Slab: Plan

Contract Department * Projects * DGPC BHUTAN * Contracts Section

ISSUED FOR TENDERING

Consultant: DRUK GREEN CONSULTANCY	Owner: DEPARTMENT OF ENERGY, MINISTRY OF ENERGY AND NATURAL RESOURCES
Date April 2025 / Revised date	Project: 500 kW LUNANA MINI HYDROPOWER PROJECT, GASA, BHUTAN
Designed / Verified	Title: TAIL RACE CHANNEL SECTIONS
Reviewed / Approved	
Drawn / Scale NTS	Drawing No.
THIS DRAWING IS MEANT FOR FSR NOT TO BE USED FOR CONSTRUCTION.	DGPC/DGC/LMHP/CIVIL-36 Rev. 0