DRUK GREEN POWER CORPORATION LIMITED

BIDDING DOCUMENT FOR CARRYING OUT TOPOGRAPHICAL SURVEY AND MAPPING FOR MINJEY AND PHAWAN HYDROPOWER PROJECTS

TENDER NO.: CO 0037/2026 DATED NOVEMBER 21, 2026

(INTERNATIONAL COMPETITIVE BIDDING)

These documents are meant for the exclusive purpose of bidding against this NIT and shall not be transferred, reproduced or otherwise used for purposes other than that for which they are specifically issued.

Projects & Contract Department
DGPC
BHUTAN
Contracts Section

TABLE OF CONTENTS

SECTION I – NOTICE INVITING TENDER 1
SECTION II – INSTRUCTIONS TO BIDDERS 4
A. INTRODUCTION 5
ITB. 1. Definitions and Interpretations 5
ITB. 2. Source of Funds 5
ITB. 3. Scope of Works 5
ITB. 4. Fraud and Corruption 5
ITB. 5. Eligibility of Bidders 5
ITB. 6. Exclusion of Bidders 6
ITB. 7. Eligible Countries 7
ITB. 8. Joint Venture Bids 7
ITB. 9. Responsibility of Bidders 8
B. THE BIDDING DOCUMENTS 8
ITB. 10. Contents of Bidding Document 8
ITB. 11. Clarifications on Bidding Documents 9
ITB. 12. Site Visit and Familiarization with Local Laws 10
ITB. 13. Pre-Bid Meeting 10
ITB. 14. Amendment of Bidding Documents 11
C. PREPARATION OF BIDS 11
ITB. 15. Cost of bidding 11
ITB. 16. Language of the Bid and Units of Measure 11
ITB. 17. Alternative Bids 11
ITB. 18. Documents Constituting the Bid 12
ITB. 19. Bid Submission Form and Bill of Quantities 14
ITB. 20. Bid Prices and Discounts 14
ITB. 21. Contract Price Adjustment 15
ITB. 22. Currencies of Bid 15
ITB. 23. Period of Validity of Bids 16
ITB. 24. Bid Security 16
ITB. 25. Signing of Bids 17
D. SUBMISSION OF BIDS 17
ITB. 26. Submission of Bids 17
ITB. 27. Deadline for Submission of Bids 18
ITB. 28. Late Bids 18
ITB. 29. Withdrawal, Substitution or Modification of Bids 18
E. BID OPENING, EVALUATION AND COMPARISON 19



ITB. 30. Bid Opening 19
ITB. 31. Confidentiality 20
ITB. 32. Clarification of Bids 21
ITB. 33. Responsiveness of Bids 21
ITB. 34. Technical Evaluation 21
ITB. 35. Correction of Arithmetical Errors in Price Bid 22
ITB. 36. Evaluation and Comparison of Bids 23
ITB. 37. Post-qualification of the Bidder 24
ITB. 38. Druk Green's Right to Accept any Bid, and to Reject any or all Bids 24
F. AWARD OF CONTRACT 24
ITB. 39. Award Criteria 24
ITB. 40. Notification of Award 25
ITB. 41. Debriefing by DGPC 25
ITB. 42. Signing of Contract Agreement 25
ITB. 43. Contract Performance Security 25
ITB. 44. Retention Money 26
G. PERFORMANCE EVALUATION 26
ITB. 45. Performance Evaluation of Contractor 26
SECTION III – BID DATA SHEET 27
SECTION IV – GENERAL CONDITIONS OF CONTRACT 34
A. CONTRACT AND INTERPRETATION 35
GCC.1. Definitions 35
GCC.2. Contract Documents 37
GCC.3. Interpretation 38
GCC.4. Fraud and Corruption 39
GCC.5. Language 40
GCC.6. Joint Venture 40
GCC.7. Notices 40
GCC.8. Governing Law 40
GCC.9. Settlement of Disputes 41
B. SUBJECT MATTER OF CONTRACT 42
GCC.10. Scope of Contract 42
GCC.11. Time for Commencement and Completion 43
C. PAYMENT 43
GCC.12. Contract Price 43
GCC.13. Advance Payment 44
GCC.14. Progressive Payments 46
GCC.15. Contract Price Adjustment 47

GCC.16. Overpayments and Underpayments 49
GCC.17. Taxes and Duties 49
GCC.18. Contract Performance Security 51
GCC.19. Retention Money 51
D. INTELLECTUAL PROPERTY 52
GCC.20. Copyright 52
GCC.21. Confidential Information 52
GCC.22. Indemnity 53
E. WORK EXECUTION 54
GCC.23. Representatives 54
GCC.24. Work Program 56
GCC.25. Subcontracting 57
GCC.26. Construction and Erection 58
GCC.27. Construction power and Construction water supply 63
GCC.28. Materials obtained from excavation 64
GCC.29. Materials 65
GCC.30. Site Laboratory 66
GCC.31. Quality Assurance Program 66
GCC.32. Inspection and Tests 66
GCC.33. Measurement and Evaluation 68
GCC.34. Tests on Completion 68
GCC.35. Taking Over of Works 69
F. GUARANTEES AND LIABILITIES 70
GCC.36. Liquidated Damages for delay 70
GCC.37. Defect Liability 71
GCC.38. Limitations of Liability 72
G. RISK DISTRIBUTION 72
GCC.39. Protection of Works 72
GCC.40. Insurance 72
GCC.41. Unforeseen adverse physical Conditions 74
GCC.42. Change in Laws and Regulations 75
GCC.43. Force Majeure 75
H. CHANGE IN CONTRACT ELEMENTS 77
GCC.44. Change in Works 77
GCC.45. Extension of Time for Completion 80
GCC.46. Contractor's Claims 80
GCC.47. Claims towards idling of resources 81
GCC.48. Suspension 82

GCC.49. Termination 83
GCC.50. Assignment 87
GCC.51. Release from Performance 87
SECTION V – SPECIAL CONDITIONS OF CONTRACT 88
SECTION VI – TERMS OF REFERENCE (ATTACHED AS ANNEXURE I) 92
SECTION VIIA - BIDDING FORMS 94
Form 1: Bid Security (Bank Guarantee) 95
Form 2: Certificate Regarding Acceptance of Important Conditions 97
Form 3: Integrity Pact Statement 98
Form 4: Bidder's Information Form 101
Form 5: Power of Attorney 103
Form 6: Information for Meeting Qualification Requirement (QR) 105
Form 7: Equipment/Machinery Deployment Schedule 118
Form 8: Details of proposed Subcontractors (Not Applicable) 119
Form 9: Affidavit/Self-declaration Regarding Eligibility of Bidders 120
Form 10: Form of Joint Venture Agreement (if applicable) – Not Applicable 121
Form 11A: Deviation from technical specifications Schedule 124
Form 11B: Deviation Schedule of Financial Bid 125
Form 12: Details in respect of local representation: Not Applicable 126
Form 13: Quality Assurance Program 127
Form 14: Performance Evaluation System Acceptance 128
Form 15: Additional Information (If any) 129
Form 16A: Bid Submission Form for Technical Bid 130
Form 16B: Bid Submission Form for Financial Bid 132
Form 17A: Bill of Quantities 133
Form 17B: Bill of Quantities (Foreign currency) – Not Applicable 134
SECTION VIIB - CONTRACT FORMS 135
Form 18: Letter of Award of Contract 136
Form 19: Contract Agreement 137
Form 20: Bank Guarantee for Contract Performance Security 139
Form 21: Bank Guarantee for Advance Payment 141
Form 22A: Deed of hypothecation for secured advances – Contractor's plant and equipment – Not Applicable 143
Form 22B: Deed of hypothecation for secured advances – Construction Materials (Not Applicable) 145
Form 23: Validity extension of Bank Guarantee 147
SECTION VIII – PERFORMANCE EVALUATION SYSTEM 148
1. INTRODUCTION 149
2. OBJECTIVES 149

3. PERFORMANCE EVAULATION SYSTEM (PES) 149
3.1 Pre-construction (10%) 149
Construction (80%) 150
Completion Time (10%) 152
4. Contractor Assessment Category 152
5. EVALUATION PERIOD AND DEBARMENT 153
5.1. Evaluation period 153
5.2. Debarment of Contractors 153

SECTION I – NOTICE INVITING TENDER



DETAILED NOTICE INVITING TENDER

Druk Green Power Corporation Limited
Projects Department
Thimphu, Bhutan

NOTICE INVITING TENDER

(INTERNATIONAL COMPETITIVE BIDDING)

For

CARRYING OUT TOPOGRAPHICAL SURVEY AND MAPPING FOR MINJEY & PHAWAN HYDROPOWER PROJECTS

Tender No.: CO 0037/2026 **November 21, 2026**

Druk Green Power Corporation Limited (DGPC) invites sealed Bids from eligible Bidders meeting the qualification requirements for Carrying out Topographical Survey and Mapping for Minjey and Phawan Hydropower Projects as per the scope of work mentioned hereinafter.

1.0 Scope of work: The brief scope of work is as under:
The main works covered under this contract shall include the following, but not limited to:
i. Control survey and establishment of control points.
ii. Topographical survey and mapping
iii. River survey

2.0 Detailed specifications, scope of Work and terms and conditions are given in the Bidding Documents, which are available at the address given below as per the following schedule:

NIT No	:	CO 0037/2026 dated November 21, 2026
Document availability date & time	:	From November 21, 2026 to December 7, 2026 on all working days
Bid receipt date & time	:	Up to December 7, 2026 by 1500 hrs (BST)
Pre-bid meeting	:	Only if required
Bid opening date & time	:	On December 7, 2026 at 1530 hrs at Contract Section Office, PCD, DGPC Corporate Offcie, Thimphu

3.0 Bidding documents shall be downloaded from DGPC website (www.drukgreen.bt/tender) free of cost. Bidders downloading the documents from the website should register themselves by informing to the nodal officer of DGPC immediately after the documents are downloaded or, before the date deadline for submission of the Bid and their intention to submit the Bid.

4.0 Downloading of Bidding Documents shall not automatically construe that the Bidder fulfils the Qualifying Requirements, which shall be determined during Bid evaluation based on data/documents submitted by the Bidder. Bids shall be submitted at the address given below and shall be opened in the presence of Bidder's representatives who choose to attend.

5.0 All Bids must be accompanied by Bid security for an amount of **BTN 183,000.00** [Bhutanese Ngultrum one hundred eighty-three thousand] only in the form of Demand Draft/Cash Warrant/Bank Guarantee/ Bankers Cheque/Cash Order, issued by Financial Institution of Bhutan or any foreign bank acceptable and enforceable by the Financial Institution of Bhutan and and shall

Projects & Contract Department DGPC BHUTAN Contracts Section

remain valid till **April 6, 2027.** Bids not accompanied with an acceptable Bid security as specified in Bidding Documents, or Bids accompanied with Bid security of inadequate value and validity shall be rejected by DGPC and in such cases Bids shall be returned to the Bidders.

6.0 Qualification Requirement for Bidders shall be as specified in the BDS.

7.0 No request for sending the Bidding Documents by post or by Courier Service shall be entertained. Bid Documents are not transferable.

8.0 DGPC reserves the right to accept or reject any Bid partly or fully or cancel the bidding process without assigning any reasons thereof and in such case no Bidder/intending Bidder shall have any claim arising out of such action of DGPC.

9.0 Delivery Schedule: The Overall duration for the completion of survey works for both projects shall be **60 days** from date of issuance of Letter of Award.

10.0 Address for Communication:

Sonam Choden
Manager, Contracts Section
Druk Green Power Corporation Limited
1168 Serbi Lam Southeast
Thimphu 11001; Bhutan
Tel: +975-2-339875
Email: dgpccotenders@drukgreen.bt

Projects & Contract Department DGPC BHUTAN Contracts Section

SECTION II – INSTRUCTIONS TO BIDDERS



SECTION II – INSTRUCTIONS TO BIDDERS

A. INTRODUCTION

ITB. 1. Definitions and Interpretations

ITB.1.1. Unless otherwise stated, throughout this Bidding Document definitions and interpretations shall be as prescribed in the General Conditions of Contract (GCC).

ITB. 2. Source of Funds

ITB.2.1. Druk Green Power Corporation Limited (DGPC) intends to finance the Works covered under these Bidding Documents from the source(s) as mentioned in Bidding Data Sheet (BDS).

ITB. 3. Scope of Works

ITB.3.1. The scope of Works shall be as specified in Section VI, Technical Specification. The name and identification number of the Contract is provided in the NIT.

ITB.3.2. The successful Bidder will be required to complete the Works by the Time for Completion specified in the SCC.

ITB. 4. Fraud and Corruption

ITB.4.1. DGPC requires that the Bidders, Contractors and their Subcontractors and their respective employees, consultants & agents, shall observe the highest standards of ethics during the bidding process and execution of contracts. In pursuance of this policy, the terms "Corrupt practice", "Fraudulent practice", "Collusive practice", "Coercive practice" and "Obstructive practice" shall be as per definition in GCC.4.

ITB.4.2. DGPC will reject a Bid for award if it determines that the Bidder recommended for award has, directly or through an agent, engaged in corrupt, fraudulent, collusive, coercive or obstructive practices in competing for the Contract in question;

ITB.4.3. DGPC will declare the Bidder ineligible, either indefinitely or for a stated period of time, if at any time it determines that the Bidder has, directly or through an agent, engaged in corrupt, fraudulent, collusive, coercive or obstructive practices in competing for, or in executing, a Contract;

ITB.4.4. DGPC requires that Bidders, as a condition of admission to eligibility, execute and attach to their Bids an Integrity Pact Statement as per Form 3: Integrity Pact Statement. Failure to provide a duly executed Integrity Pact Statement shall result in disqualification of the Bid; and

ITB.4.5. DGPC will report any case of corrupt, fraudulent, collusive, coercive or obstructive practice to the relevant agencies, including but not limited to the Anti-Corruption Commission (ACC) of the Kingdom of Bhutan, for necessary action in accordance with the statutes and provisions of the relevant agency.

ITB.4.6. DGPC shall have the discretion to take any or all of the actions specified under ITB.4.2, ITB.4.3, ITB.4.4 and ITB.4.5.

ITB.4.7. Furthermore, the Bidders shall make themselves fully aware of the provisions stated in GCC.4 with regard to Fraud and Corruption.

ITB. 5. Eligibility of Bidders

ITB.5.1. A Bidder shall be an incorporated legal entity or a Joint Venture (JV) of such entities under an existing agreement where joint venture bids are permitted. A Bidder, and all parties constituting the Bidder, shall have the nationality of any country, subject to the restrictions specified in ITB. 7. A Bidder shall be deemed to have the nationality of a country if the



Bidder is constituted, incorporated, or registered and operates in conformity with the provisions of the laws of that country. This criterion shall also apply to the determination of the nationality of the proposed Subcontractors for any part of the Contract.

ITB.5.2. A Bidder shall not have conflict of interest. Any Bidder, found to have a conflict of interest, shall be disqualified. Bidders may be considered to have a conflict of interest with one or more parties in the same bidding process if they:

a) or any of their affiliates are associated, or have been associated in the past, to provide consulting services for the preparation of the design, specifications and/or other documents to be used for the procurement of the Works to be executed pursuant to these Bidding Documents, or in any other way provided the consulting services in any aspect of the preparatory stages leading up to the issue of these Bidding documents or hired/ proposed to be hired by DGPC as Project Manager for the Contract implementation.

b) submit more than one Bid in this bidding process either individually or as a partner in the Joint Venture, except for alternative offers permitted under ITB. 17. Participation by a Bidder in more than one Bid shall result in rejection of all Bids in which the Bidder has participated. However, this does not limit the participation of a Bidder as a Subcontractor in anotherBid or more than one Bid, or

c) employ or otherwise engage, either directly or through any of their Affiliates, a DGPC employee, his spouse or any of the dependent parent or close relative of a DGPC employee. For the purposes of this sub-paragraph, a close relative is defined as immediate family which includes, brother, sister, and own children.

ITB.5.3. A company formed by the merger of two or more companies or divisions of such companies engaged in execution of Works as specified in the Bidding Documents can also participate, provided the constituent companies or divisions before merger, individually or jointly, meet the stipulated qualification requirements fully.

ITB.5.4. If so specified in the BDS, in the case of a Bidder not doing business within the Kingdom of Bhutan, the Bidder will be (if awarded the Contract) represented by an agent in the Kingdom of Bhutan, who shall be a legal entity, equipped and able to carry out the Contractor's obligations as prescribed in the Technical Specifications.

ITB.5.4.1. Where an agent is permitted to submit the Bid on behalf of the Foreign Bidder, payment of agency commission, if any, to the Foreign Bidder shall only be made in the local currency.

ITB.5.4.2. Both the agent as well as Foreign Bidder shall not be permitted to submit the Bid in the same bidding process and one agent working for more than one parties will not be permitted to represent multiple parties in different Bids.

ITB.5.4.3. In case of JVs with any of the Bhutanese Bidder the payment to the Bhutanese member of the JV for the services and supply from within Bhutan shall be in local currency.

ITB.5.5. The Bidder shall provide such evidence of their continued eligibility satisfactory to the DGPC as the DGPC shall reasonably request till the award of the contract.

ITB. 6. Exclusion of Bidders

ITB.6.1. A Bidder shall be ineligible for participating in this bidding process under the following circumstances:

a) The Bidders is insolvent or is in receivership or is a bankrupt or is in the process of being wound up; or has entered into an arrangement with the creditors; or

Projects & Contract Department DGPC BHUTAN Contracts Section

b) The Bidders' affairs are being administered by a court, judicial officer or appointed liquidator; or

c) The Bidder has suspended business or is in any analogous situation arising from similar procedures under the laws and regulations of his country of establishment; or

d) The Bidder has been found guilty of professional misconduct by any competent authority as per law or any professional body; or

e) Have at least one controlling shareholder in common; or

f) receive or have received any direct or indirect subsidy from either party; or

g) have a relationship with each other, directly or through common third parties, that puts them in a position to have access to information about or influence on the Bid of another Bidder, or influence the decisions of the Employer regarding this bidding process

h) The Bidder has not fulfilled his obligations with regard to the payment of taxes, social security or other payments due in accordance with the laws of the country in which he is established or of the Kingdom of Bhutan; or

i) The Bidder has been declared by DGPC to be ineligible for participation in tenders on account of any fraud and/or corruption in competing or executing a Contract; or

j) The Bidder has been debarred from participation in public procurement by any competent authority as per law.

ITB. 7. Eligible Countries

ITB.7.1. DGPC shall permit legal entities from all countries to submit their Bids for contracting of Works under these Bidding Documents having Origin in any country.

ITB.7.2. As an exception, Bidders of a country, and/or Works/ services provided from or by a country shall be excluded if:

a) as a matter of law or official regulation, the Royal Government of Bhutan (RGoB) prohibits commercial relations with that country; or

b) RGoB prohibits any contracting of Works or services from a country or any payments to persons or entities in that country pursuant to a decision of the United Nations Security Council taken under Chapter VII of the Charter of the United Nations as specified in the BDS.

ITB. 8. Joint Venture Bids

ITB.8.1. If so permitted in the BDS, Bids submitted by a JV of number of legal entities as specified in the BDS subject to the condition that the total number of legal entities shall not exceed the number of entities as specified in the BDS, shall comply with the following requirements:

a. The Bid shall be signed by the authorised signatory of the member, who have been authorised by all the other members of the JV, so that the Bid is legally binding on all members.

b. One of the members shall be designated as leader who shall have the authority to conduct all business for and behalf of any and all members of the JV; this authorisation shall be evidenced by submitting with the Bid a power of attorney signed by legally authorised signatories of the other members.

Projects & Contract Department DGPC BHUTAN Contracts Section

c. The leader shall be authorised to receive instructions for and on behalf of any and all members of the JV and the entire execution of the Contract, including payment, shall be done exclusively with the leader.

d. All members of the JV shall be liable jointly and severally for the execution of the Contract in accordance with its terms.

e. A copy of the agreement entered into by the JV members as per the format provided in the Bidding Documents shall be submitted with the Bid.

ITB.8.2. In order for JV to qualify, either the lead partner must meet the minimum technical qualification requirements or the technical qualification requirement can be met jointly by the JV partners, if so, specified in the BDS.

ITB.8.3. The financial qualification requirements however may be met jointly by the members of the JV subject to the condition that each member can independently meet at least the minimum financial qualification requirements as specified in the BDS. Failure to comply with this requirement will result in rejection of the Joint Venture's Bid.

ITB.8.4. A firm can be a member in only one JV; Bids submitted by JVs including the same firm as member in more than one JV in the same bidding process will be rejected.

ITB.8.5. Domestic bidders and JVs, consortia or associations of domestic bidders who may be eligible for a margin of preference in Bid evaluation shall supply all information to satisfy the criteria for eligibility as described in ITB. 5.

ITB. 9. Responsibility of Bidders

ITB.9.1. DGPC will not assume any responsibility regarding information gathered, interpretations or conclusions made by the Bidder or regarding information, interpretations or deductions the Bidder may derive from the data or any report furnished by DGPC. Verbal communication or conversation with any officer, employee of DGPC either before or after the submission of Bid shall not affect or modify any of the terms or obligations contained herein.

ITB.9.2. It shall be the sole responsibility of Bidders to determine and to satisfy themselves by such means as they consider necessary or desirable as to all matters pertaining to this bidding process including in particular all factors that may affect the performance of the Contract in the event of award.

B. THE BIDDING DOCUMENTS

ITB. 10. Contents of Bidding Document

ITB.10.1. The scope of Work, bidding procedures, Contract terms and conditions and technical specifications are prescribed in the Bidding Documents. The set of Bidding Documents issued for the purpose of bidding includes the sections stated below together with any addendum/amendment to be issued in accordance with ITB. 14.

Section I	:	Notice Inviting Tenders	
Section II	:	Instructions to Bidders	
Section III	:	Bid Data Sheet (BDS)	
Section IV	:	General Conditions of Contract (GCC)	
Section V	:	Special Conditions of Contract (SCC)	
Section VI	:	Technical Specifications and Drawings	
Section VII	:	Forms	
Section VIIA	:	Bidding Forms	
		1.	Bid Security Form – Bank Guarantee

Projects & Contract Department DGPC BHUTAN Contracts Section

		2.	Certificate regarding acceptance of important conditions
		3.	Integrity Pact Statement
		4.	Bidders Information Form
		5.	Power of Attorney
		6a.	Financial Details of Bidder
		6b.	Details of Financial Capacity Status
		6c.	Present Order Book Position
		6d.	Past Performance Data
		6e.	Data regarding Key Personnel
		6f.	Brief write up regarding Construction Methodology &Project Management
		7.	Equipment/ Machinery Deployment Schedule
		8.	Details of proposed Subcontractors
		9.	Affidavit affirming eligibility of Bidder
		10.	Form of Joint Venture Agreement
		11.	Deviation Schedule
		12.	Details in respect of local representation
		13.	Quality Assurance Program
		14.	Performance Evaluation System Acceptance Form
		15.	Form for any other additional information
		16.	Bid Submission Form
		17A	Bill of Quantities (items quoted in Ngultrum)
		17B	Bill of Quantities (items quoted in foreign currency)
Section VIIB	:	Contract Forms	
		18.	Letter of Award
		19.	Contract Agreement
		20.	Bank Guarantee Form for Contract Performance Security
		21.	Bank Guarantee Form for Advance Payment
		22A	Deed of hypothecation for Secured Advances – Contractor's plant and equipments
		22B	Deed of hypothecation for Secured Advances – Construction materials
		23.	Validity extension of Bank Guarantee
Section VIII	:	Performance Evaluation System	

ITB.10.2. Failure to furnish all information and documents required as per the Bidding Documents or submission of a Bid not substantially responsive to the Bidding Documents in every respect will be at the Bidder's risk and may result in rejection of his Bid.

ITB. 11. Clarifications on Bidding Documents

ITB.11.1. The Bidder shall examine the Bidding Documents thoroughly in all respects and if any conflict, discrepancy, error or omission is observed, Bidder may request clarification promptly. A prospective Bidder requiring any clarification on Bidding Documents may notify DGPC in writing, to the address mentioned in BDS, not later than the date and time specified in BDS.

ITB.11.2. DGPC will issue clarification(s) as it may think fit in writing not later than fifteen (15) days prior to the deadline/ extended deadline for submission of Bids prescribed by DGPC. All such clarifications shall form part of the Bidding Documents and shall accompany the Bidder's Proposal. Copies of DGPC's response (including an explanation of the query but

Projects & Contract Department DGPC BHUTAN Contracts Section

without identifying its source) will be sent to all prospective Bidders who have registered with DGPC for the work.

ITB.11.3. For the information of Bidders, the clarifications shall also be uploaded on the website. The Bidders are advised to visit the website of the company from time to time in their own interest.

ITB.11.4. Bidders shall not be allowed to seek any clarification of the Bidding Documents in person or by telephone or other verbal means. Any queries sent by the Bidders after the date and time notified as per BDS, or extended date, if any, shall not be entertained.

ITB.11.5. Should DGPC deem it necessary to amend the Bidding Documents as a result of a clarification, it shall do so following the procedure under ITB. 14.

ITB.11.6. Any failure by the Bidder to comply with the aforesaid requirement shall not excuse the Bidder for performing the Works in accordance with the Contract, in case of award.

ITB. 12. Site Visit and Familiarization with Local Laws

ITB.12.1. The Bidder is advised to visit and examine the Site and its surroundings where the Works are to be executed and obtain for itself on its own responsibility and risk, all information that may be necessary for preparing the Bid and entering into a Contract for execution of the Works. The costs of visiting the Site shall be borne by the Bidder fully. DGPC shall facilitate the Site visit and Bidder is required to furnish advance intimation of his Site visit.

ITB.12.2. The Bidder shall acquaint himself with the adequacy of local conditions and requirements including but not limited to the approach roads to the Site, adequacy of existing culverts, bridges and roads for the expected traffic, water and power supply, nature of ground and sub-soil conditions, water table level, river regime, river water levels and other details, geological and climatic conditions, local terrain, availability of labour and construction material, communication facilities, utility and labour conditions and shall not claim at any time after submission of the Bid or during the execution of the Contract that there was any lack of understanding with regard to the conditions imposed in the Contract or prevailing at the Site.

ITB.12.3. In their own interest, the Bidders are required to familiarise themselves with the Income Tax Act, prevailing labour laws including laws and regulations governing engagement of labour for employment and deployment at Site & other related Acts and Laws prevalent in the Kingdom of Bhutan. Further, the Bidders are required to comply with these Acts/Laws and other relevant provisions particularly with reference to the execution of the Works.

ITB.12.4. Foreign Bidders shall familiarise themselves especially with the rules and regulation applicable to the foreign firms for carrying out business in the Kingdom of Bhutan.

ITB.12.5. The Bidder and any of its personnel or agents will be granted permission by DGPC to enter upon its premises and lands for the purpose of such inspection, but only upon the express condition that the Bidder, its personnel and agents shall release and indemnify DGPC and its personnel and agents from and against all liability in respect thereof and shall be responsible for death or personal injury (whether fatal or otherwise), loss of or damage to property and any other loss, damage, costs and expenses howsoever caused and incurred as a result of the inspection.

ITB. 13. Pre-Bid Meeting

ITB.13.1. A pre-bid meeting shall be conducted only if necessary, to clarify doubts and concerns of the Bidders prior to submission of Bids. The Bidders who have registered with DGPC for the work shall be invited to attend pre-bid meeting to be held on the date, time and location specified in BDS.



ITB.13.2. Non-attendance at the pre-bid meeting will not be a cause for disqualification of Bidders but at the same time shall not entitle them to raise any query at a later date.

ITB.13.3. The Bidders are requested to submit their questions and queries in writing to reach DGPC not later than one week before the meeting. Clarifications to the queries raised in the pre-bid meeting, including the text of the questions raised without identifying the source, and the responses given together with any responses prepared after the meeting, shall be circulated to all the registered Bidders and also uploaded in DGPC website.

ITB.13.4. Any modification to the Bidding Documents that may become necessary as a result of the pre-bid meeting shall be made by DGPC through the issue of an addendum pursuant to ITB. 14 and not through the clarifications to the queries of pre bid meeting.

ITB. 14. Amendment of Bidding Documents

ITB.14.1. At any time after the NIT date, but not later than fifteen (15) days prior to the deadline for submission of Bids, DGPC may amend the Bidding Documents by issuing an addendum/ amendment. This may be done either on DGPC's own initiative or in response to clarification requests from any prospective Bidder who have registered with DGPC for the work, provided such request is received by the date specified in the BDS.

ITB.14.2. The addendum/amendment/corrigendum will be sent in writing to all prospective Bidders who have registered with DGPC for the work. DGPC shall in no way be responsible for any ignorance of the Bidder about the amendment to the Bidding Documents.

ITB.14.3. Such addendum/amendment/corrigendum shall be part of the Bidding Documents and binding on the prospective Bidders. DGPC shall assume that the information contained therein have been taken into account by the Bidder in its Bid and shall bear no responsibility or liability arising out of non-receipt of the same in time or otherwise by the Bidder.

ITB.14.4. DGPC may, at its discretion, extend the deadline for submission of Bids pursuant to ITB.27.2 to allow prospective Bidders reasonable time to take the addendum into account in preparation of their Bids.

C. PREPARATION OF BIDS

ITB. 15. Cost of bidding

ITB.15.1. The Bidder shall bear all costsassociated with the preparation and submission of his Bid (including Site visits and attending pre-bid meetings) and DGPC in no case shall be responsible or liable for these costs, regardless of the conduct or outcome of the bidding process.

ITB. 16. Language of the Bid and Units of Measure

ITB.16.1. The Bid, and all correspondence and documents related to the Bid shall be in English. Additional/ supporting documents provided by the Bidder related to the Bid shall also be in English and if in any other language, should be translated to English. The English translation shall prevail on the interpretation.

ITB.16.2. The units of measurement shall be metric system unless otherwise specified.

ITB. 17. Alternative Bids

ITB.17.1. Unless otherwise indicated in the BDS, alternative Bids shall not be considered, and the BDS shall specify which of the following options shall be allowed:

a) Option One: A Bidder may submit alternative Bids with the base Bid and DGPC shall only consider the alternative Bids offered by the Bidder whose Bid for the base case was determined to be the lowest-evaluated Bid, or

Projects & Contract Department DGPC BHUTAN Contracts Section

b) Option Two: A Bidder may submit an alternative Bid with or without a Bid for the base case. All Bids received for the base case, as well as alternative Bids meeting the Technical Specifications as per Section VI, shall be evaluated on their own merits.

ITB.17.2. Alternative Bids shall provide all information necessary for a complete evaluation of the alternative by DGPC, including design calculations, technical specifications, breakdown of prices, proposed construction methods and other relevant details.

ITB.17.3. In case of multiple alternative Bids, DGPC shall evaluate, compare and rank the alternative Bids subject to technical conformance suitability & acceptability in accordance with ITB. 36. In case of single alternative Bid, subject to technical conformance suitability & acceptability and price reasonability, the Bid may be accepted.

ITB. 18. Documents Constituting the Bid

ITB.18.1. The Bid to be prepared and submitted by the Bidder shall consist of the following documents:

ITB.18.1.1. Envelope I shall contain (applicable for both single stage single envelope and single stage two envelope Bids):

Bid Security in accordance with ITB. 24 and Form: 1 of Section VIIA in case of a Bank Guarantee., or Bids accompanied by bid security of inadequate value and validity, shall not be entertained and Envelope II and III of such Bids shall be returned to the Bidder.

ITB.18.1.2. Envelope II shall contain:

a. Integrity Pact Statement duly executed by the bidder, as per Form: 3 of Section VIIA;

b. Self-attested latest Tax Clearance Certificate from the tax authority of the respective country or any other equivalent document to confirm that the bidder is tax compliant in the country of its incorporation,

c. Valid Trade Licence and CDB registration certificate (for Bhutanese Bidders)

d. No deviation, whatsoever, is permitted by DGPC, to the provisions of the Bidding Documents listed in the BDS. The Bidders are advised that while preparing their Bids and quoting prices, these conditions may appropriately be taken into consideration. Bidders are required to furnishCertificate regarding acceptance of important conditions in accordance with Form: 2 of Section VIIA indicating their compliance to the provisions listed in the BDS;

e. **Bidder's Information Form**, in accordance with Form: 4 of Section VIIA including Certificate of Incorporation in case of companies or any other certificate as an evidence of a legal entity.

f. A **Power of Attorney**, in original, as per Form: 5 of Section VIIA authorising that the person(s) signing the Bid has/have the authority to sign the Bid and to make the Bid binding upon the Bidder during the full period of its validity in accordance with ITB. 23.

g. **Bidder's Qualification**

In the absence of pre-qualification process, documentary evidence establishing that the Bidder is qualified to perform the Contract, if its Bid is accepted, shall be furnished. The documentary evidence of the Bidder's qualifications to perform the Contract, if its Bid is accepted, shall establish to DGPC's satisfaction that the Bidder has the capacities and capabilities necessary to perform the Contract and meets the experience and other criteria outlined below.

Projects & Contract Department DGPC BHUTAN Contracts Section

Particulars for meeting the prescribed qualification requirement as per BDS and details for assessment of capacity and capability of Bidder to perform the Contract shall be required as per Form: 6A to Form: 6F of Section VIIA.

h. **Equipment/ Machinery Deployment Schedule**

The Bidder shall indicate the quantum and schedule of the equipment/ machinery/ lab equipment, etc. he proposes to deploy for the Works to be executed as per Form: 7 of Section VIIA. Such plant and machinery to be deployed shall not be less than the minimum specified in the Technical Specifications.

i. **Subcontractors proposed by the Bidder**

The Bidder shall furnish the names and nationalities of Subcontractors proposed for subcontracting (minimum three for each work proposed to be sub contracted) for the Works which are permitted for subcontracting as per the provisions of SCC, as per Form: 8 of Section VIIA.

The Bidder shall be responsible for ensuring that the Subcontractors proposed for the Works comply with the qualification requirements prescribed in the SCC, for the respective Works. DGPC reserves the right to delete any proposed Subcontractor from the list prior to award of Contract.

j. An **affidavit** (for International Bidders)/self declaration form (for Bhutanese Bidders) as per Form: 9 of Section VIIA affirming the eligibility of the Bidder.

k. Bids submitted by a **Joint Venture**, if so permitted in the BDS, shall furnish a copy of the agreement entered into by the joint venture members as per the form included in Form: 10 of Section VIIA provided in the Bidding Documents

l. **Signed Bidding Documents**

The BDS, GCC, Special Conditions of Contract and Technical Specifications and Drawings including any clarifications and/ or amendments thereto, duly sealed and signed by an authorized signatory of the Bidder as a condition of acceptance.

m. **Deviations**, if any, from the terms, conditions and technical specifications of the Bidding Documents shall be listed as per Form:11 of Section VIIA. The Bidder shall provide the additional price, if any, for withdrawal of the deviations stated.

n. **Alternative Bids**

Bidders wishing to offer technical alternatives to the requirements of the bidding documents must first price DGPC's design of the Works as described in the Bidding Documents, and shall further provide all information necessary for a complete evaluation of the alternatives by DGPC, including drawings, design calculations, technical specifications, breakdown of prices, proposed construction method and other relevant details. Only the technical alternatives, if any, of the lowest evaluated Bidder conforming to the basic technical requirements shall be considered by DGPC or as per the option chosen (out of those specified in ITB 17) in the BDS shall be considered for the evaluation.

o. **Local Representation**

If a Foreign Bidder has engaged a Bhutanese agent in accordance with ITB.5.4, it will be required to give the following details in its Bid as per Form: 12 of Section VIIA:

- The name and address of the local agent;
- Details of services the agent will render; and

Projects & Contract Department DGPC BHUTAN Contracts Section

- The fixed amount of remuneration and currency of payment for the agent included in the offer.

The agency commission shall be indicated in the space provided for in the Price Schedule and will be paid to the Bidder's agent in Bhutan in Ngultrum, if the Bid currency is other than INR/BTN then equivalent Nu using the TT selling exchange rate on the date of price bid opening or of any immediate preceding date prior to the date of price bid opening announced by the Royal Monetary Authority of (RMA) the Kingdom of Bhutan (www.rma.org.bt), and such remuneration shall not be subject to any escalation or any further exchange rate variation.

p. **Construction Methodology and Project Management** as per Form No. 6F based on the requirements specified in Section VI, Technical Specification.

q. **Quality Assurance Program**

Details regarding the overall quality management & procedures which the Bidder proposes to follow during various phases of execution of the Contract as per Form: 13 of Section VIIA. The quality assurance program and procedures should be in line with the requirements specified in the Technical Specifications.

r. **Performance Evaluation System** Acceptance Form as per Form: 14 of Section VIIA

s. Any other **additional information**/ document which the Bidder wishes to provide in his Bid as per Form: 15 of Section VIIA.

ITB.18.1.3. Envelope III shall contain:

a. Bid Submission Form in accordance with Form: 16 of Section VIIA;

b. Priced Bill of Quantities, in accordance with Form: 17A and 17B of Section VIIA;

c. Alternative Price Bids, if applicable, as per ITB. 17;

d. Details regarding Contract Price Adjustment as per SCC.

ITB.18.1.4. In case where Bids are invited under Single Stage Single Envelope mode, the documents contained in Envelope III shall also be kept in Envelope II.

ITB. 19. Bid Submission Form and Bill of Quantities

ITB.19.1. The Bidder shall submit the Bid Submission Form using the form furnished in Form: 16 of Section VIIA. This form must be completed without any alterations to its text, and no substitutes shall be accepted. All blank spaces shall be filled in with the information requested.

ITB.19.2. The Bidder shall submit the Priced Bill of Quantities using the forms furnished in Form: 17A and 17B of Section VIIA.

ITB.19.3. The Bid Form and Priced Bill of Quantities shall be signed as per ITB. 25.

ITB. 20. Bid Prices and Discounts

ITB.20.1. The Bidder shall fill in unit rates/ prices for all items of the Works described in the Bill of Quantities in figures. The unit rates/ prices quoted in the Bill of Quantities shall also be deemed to include any incidentals not shown or specified but reasonably implied or necessary for the proper completion and functioning of the whole specified item of the Works in accordance with the Bidding Documents and shall also deemed to include the cost of construction of infrastructural facilities required for execution of the Contract and not included in the Works. The Contract shall be for the whole Works based on the unit rates and prices in the Priced Bill of Quantities submitted by the Bidder.

Projects & Contract Department DGPC BHUTAN Contracts Section

ITB.20.2. The unit rates/ prices quoted in the Bill of Quantities shall be inclusive of all taxes, duties, levies & charges payable in the Bidder's country and in the Kingdom of Bhutan (including those levied on the construction material quarried from land owned by DGPC or otherwise), as of thirty (30 days) days prior to the deadline for submission of Bids.

ITB.20.3. The total price at the bottom of the Priced Bill of Quantities shall be indicated both in figures and words.

ITB.20.4. If rebate/discount is offered, the overall discount in percentage shall be brought out in the Priced Bill of Quantities. Conditional rebates/discount, if any, offered by any Bidder shall not be considered during Bid evaluation.

ITB.20.5. The prices and discounts quoted by the Bidder in the Bid Submission Form and in the Priced Bill of Quantities shall conform to the requirements specified below.

ITB.20.6. Items for which no rate or price is entered by the Bidder in the Priced Bill of Quantities shall not be paid by DGPC when executed and shall be deemed covered by the other rates and prices mentioned in the Priced Bill of Quantities.

ITB.20.6.1. Bidders participating from India, for supply and bonafide use in the Kingdom of Bhutan shall quote the rates and prices for the items in the Bill of Quantities exclusive of any effect of the Integrated Goods and Service Tax (IGST). The IGST on the export of goods or services or both are covered under Zero Rated Supply as per Chapter VII, 16(1) THE INTEGRATED GOODS AND SERVICES TAX ACT, 2019 of India.

ITB. 21. Contract Price Adjustment

ITB.21.1. Prices quoted by the Bidder shall be fixed during the Bidder's performance of the Contract or subject to variation, as specified in the BDS. A Bid submitted with an adjustable price quotation shall be treated as non-responsive and shall be rejected pursuant to ITB. 33 unless adjustable price quotations are permitted.

ITB.21.2. If, in accordance with the BDS, prices quoted by the Bidder are subject to adjustment during the performance of the Contract:

ITB.21.2.1. The prices quoted by the Bidder shall reflect changes in the cost of labour, material, etc. in accordance with the procedures specified in GCC.15

ITB.21.2.2. A Bid submitted with a fixed price quotation when Bids have been invited with price variation, will not be rejected, but the price adjustment will be treated as zero.

ITB.21.2.3. The estimated effect of the price adjustment provision applied over the period of execution of the Contract shall not be taken into consideration in Bid evaluation.

ITB.21.2.4. DGPC shall indicate the name, source and origin of indices along with their base values and corresponding coefficients as per SCC.

ITB. 22. Currencies of Bid

ITB.22.1. The unit rates and prices shall be quoted by the Bidder in Form: 17A of Section VIIA in Ngultrum and in Form: 17B of Section VIIA in foreign currency. The currencies in Form: 17B of Section VIIA shall be specified by the Bidder at its option in any one of the currencies out of those specified in the BDS.

ITB.22.2. The rates of exchange to be used for conversion into Bhutanese Ngultrum (BTN) for evaluation and comparison, shall be the reference rates on the date of Bid opening or immediate preceding date if rate of exchange for the date of Bid opening is not available. The reference exchange rate (selling rate) prevailing at that date as posted by the Royal Monetary Authority of the Kingdom of Bhutan shall be used for the conversion of prices.

ITB.22.3. The Bids shall be evaluated in accordance with ITB.22.2 above, but the payment shall be made in the currency of Bid.



ITB.22.4. Not withstanding the provision contained in clause ITB.22.1 Indian Bidders must quote the unit rates in INR only.

ITB. 23. Period of Validity of Bids

ITB.23.1. Bids shall remain valid till the date specified in the BDS. A Bid valid for a shorter period shall be liable for rejection by DGPC as non-responsive.

ITB.23.2. In exceptional circumstances, prior to expiry of the Bid validity period, DGPC may request Bidders to extend the period of validity of their Bids. The request and the responses shall be made in writing to all the participating Bidders. A Bidder may refuse the request to extend the validity of its Bid without forfeiting its Bid Security. In such a case, the Bid of the Bidder, refusing to extend the validity of its Bid, shall not be considered for evaluation and award. A Bidder granting the request will be required to extend the validity of their Bid securities correspondingly but shall not be required or permitted to modify its Bid, except as provided in ITB. 29.

ITB.23.3. The provisions of ITB.24.6 regarding discharge and forfeiture of Bid Security shall continue to apply during the extended period of Bid validity.

ITB. 24. Bid Security

ITB.24.1. The Bidder shall furnish, as part of its Bid, a Bid Security in original form, denominated in the currency and in the amount specified in the BDS.

ITB.24.2. The Bid Security shall:

a) at the Bidder's option, be in any of the following forms:

   i. an irrevocable Bank Guarantee; or

   ii. a Cash Warrant; or

   iii. a Demand Draft; or

   iv. Banker's cheque/cash order;

b) the bank guarantee shall be in favour of DGPC, issued by Financial Institution of Bhutan or any foreign bank acceptable and enforceable by the Financial Institution of Bhutan;

c) in the case of a bank guarantee, be in accordance with the form of Bid Security included in Form: 1 of Section VIIA;

d) be promptly payable upon written demand by DGPC in case any of the conditions listed in ITB.24.6 are invoked;

e) in case of bank guarantee, it should remain valid for a period of thirty (30) days beyond the end of the validity period of the Bid, as extended, if applicable, in accordance with ITB.23.2. Accordingly, the Bid security shall remain valid till the date specified in the BDS.

ITB.24.3. The Bid Security is to be submitted as a part of the Bid in a separate sealed envelope. Any Bid not accompanied by Bid Security of adequate value and validity shall be rejected by DGPC as non-responsive.

ITB.24.4. No interest shall be paid by DGPC on the Bid Security.

ITB.24.5. Return of Bid Security

ITB.24.5.1. The Bid Security shall be returned to successful and unsuccessful Bidders as promptly as possible upon signing of Contract and receipt of Contract Performance Security from successful Bidder in accordance with ITB. 43.



ITB.24.5.2. In case of single stage – two envelope mode of tendering, Bid Security of non- responsive Bids shall be returned immediately after technical evaluation.

ITB.24.6. The Bid Security shall be forfeited:

a) if a Bidder withdraws its Bid as a whole or in part during the period of Bid validity specified by the Bidder on the Bid Form, except as provided in ITB.23.2; or if the bidder has been found practicing corrupt or fraudulent or collusive or coercive practices during bidding process

b) if the successful Bidder fails to:

i. accept the correction of its Bid Price pursuant to ITB. 35;

ii. accept the letter of award or fails to sign the Contract in accordance with ITB. 42;

iii. furnish a Contract Performance Security in accordance with ITB. 43;

iv. withdraw the deviations proposed by him in the Bid at the cost of withdrawal mentioned by him in Form: 11 of Section VIIA of his Bid.

ITB.24.7. The Bid Security of a JV must be in the name of the lead member.

ITB. 25. Signing of Bids

ITB.25.1. The Bidder shall prepare one (1) original and copies (number as specified in BDS of the complete set of documents constituting the Bid as described in ITB. 18, and clearly mark each as "Original Bid" and 'Copy No: 1', 'Copy No: 2', etc. In the event of any discrepancy between the copies and original Bid, the original shall prevail. The BDS, GCC, SCC, Technical Specifications and Drawings including any clarifications and/ or amendments thereto, duly sealed and signed by an authorized signatory of the Bidder as a condition of acceptance.

ITB.25.2. The original and all copies of the Bid shall be in indelible ink and shall be signed by a person/persons duly authorized by the Bidder with official seal as per the power of attorney. However, any published document submitted along with the Bid shall be signed by the authorized signatory (ies) atleast on the first page and last page of such document.

ITB.25.3. A Bid submitted by a JV shall be signed by the authorised signatory of the lead member so as to be legally binding on all members.

ITB.25.4. Any interlineations, erasures, overwriting, cutting or alteration shall only be valid if they are initialed by the authorized signatory (ies) to the Bid.

D. SUBMISSION OF BIDS

ITB. 26. Submission of Bids

ITB.26.1. Each Bidder, including its Affiliate, shall be permitted to submit only one Bid against any NIT. In case, a Bidder and its Affiliate has submitted separate Bids, against the same NIT, all such Bids shall be rejected.

ITB.26.2. Bids shall be delivered by hand, courier or registered post so as to reach DGPC at the address specified in BDS on or before the date and time mentioned in BDS. Bids submitted by telex / telegram / fax / e-mail shall not be considered under any circumstances. DGPC shall not be responsible for any delay in receipt of the Bid.

ITB.26.3. In case of hand delivery, Bids shall be deposited in a sealed Tender Box (if specified in the BDS) or handed over to the Nodal officer at the address as specified in BDS.

ITB.26.4. Bids shall be submitted in the manner specified in the BDS as under:

ITB.26.4.1. Bids are to be submitted in a single closed cover Envelope containing Envelope I and Envelope II (in case of Single Stage Single Envelope) or Envelope I, Envelope II and



Envelop III (in case of Single Stage Two Envelope) with superscription on each envelope as specified in the BDS.

ITB.26.4.2. All envelopes shall be sealed with adhesive or other sealant to prevent reopening and be signed across their seals by the person authorized to sign the Bid on behalf of the Bidder.

ITB.26.4.3. If the envelopes are not sealed and marked as above, DGPC shall assume no responsibility for the misplacement or premature opening of the Bid.

ITB.26.5. When so specified in the BDS, Bidders shall have the option of submitting their Bids electronically. Bidders submitting Bids electronically shall follow the procedures specified in the BDS.

ITB. 27. Deadline for Submission of Bids

ITB.27.1. Bids must be received by DGPC in accordance with ITB. 26. In the event of the specified date for submission of Bids being declared a holiday for DGPC, the Bids will be received up to the specified time on the next working day. Such postponement of date will not have any impact on the other dates specified in the Bidding Documents (i.e. Bid validity and validity of Bid Security).

ITB.27.2. DGPC may, at its discretion, extend the deadline for the submission of Bids/ opening of Bids by issuing an addendum and hosting the same on the website, in which case all rights and obligations of DGPC and the Bidders previously subject to the original deadline shall thereafter be subject to the deadline as extended.

ITB.27.3. In the event, the deadline for submission of Bid is extended by DGPC, the Bidders who have already submitted their Bids within the original deadline of submission shall have the option to submit their revised Bid in substitution either in full or in part of earlier Bid. In the absence of a revised Bid, the original Bid shall be considered for opening and subsequent evaluation if otherwise in order. Wherever, the Bidder has submitted the revised Bid in modification of earlier Bid, the earlier Bid shall be returned unopened to the Bidder.

ITB. 28. Late Bids

ITB.28.1. Any Bid received by DGPC after the Bid submission deadline as per ITB. 27 will be declared late, rejected and returned unopened to the Bidder.

ITB. 29. Withdrawal, Substitution or Modification of Bids

ITB.29.1. A Bidder may withdraw, substitute or modify its Bid after it has been submitted by sending a written withdrawal/ substitution/ modification notice prior to the deadline for submission of Bids, duly signed by an authorized representative, including a copy of the authorization as per the power of attorney. The Bid requested to be withdrawn shall be returned unopened to the Bidder.

ITB.29.2. The withdrawal, substitution or modification of the Bid must accompany the respective written notice and must be:

a) submitted in accordance with ITB. 26 and, in addition, the respective cover envelopes shall be clearly marked "WITHDRAWAL" "SUBSTITUTION" or "MODIFICATION;" and

b) received by DGPC prior to the deadline prescribed for submission of Bids, in accordance with ITB. 27.

ITB.29.3. No Bid may be withdrawn, substituted or modified in the interval between the deadline for submission of Bids and the expiry of the period of Bid validity specified by DGPC in ITB.23.1 or any extension thereof pursuant to ITB.23.2.

ITB.29.4. Withdrawal, substitution or modification of a Bid between the deadline for submission of Bids and expiration of the period of Bid validity (or any extension thereto) shall result in

Projects & Contract Department DGPC BHUTAN Contracts Section

the forfeiture of the Bid Security pursuant to ITB.24.6. If the lowest or the lowest evaluated Bidder withdraws his Bid between the periods specified pursuant to ITB. 23, the Bid security of the Bidder shall be forfeited.

E. BID OPENING, EVALUATION AND COMPARISON

ITB. 30. Bid Opening

ITB.30.1. DGPC shall conduct the Bid opening at the address, date and time specified in the BDS. Any specific electronic Bid Opening procedures required if electronic bidding is permitted shall be as specified in the BDS.

ITB.30.2. Bidders or their authorized representatives (not more than two) who have submitted the Bids shall be allowed to attend the Bid opening. Bidders who choose to attend shall sign the attendance sheet provided in the record of Bid opening with their name designation, firm name and phone number or any other particulars as may be required. Bidders who chose to attend the opening shall not be allowed to speak on matters related to the Bid until and unless required by the committee members or by seeking permission from the Chairperson by raising hand. Bidders who have any complain with regard to the Bid opening shall write in the complaint sheet and duly sign the sheet.

ITB.30.3. The written withdrawal notice duly signed by an authorized representative of the Bidder for withdrawal of Bids, if any, shall be read out and such Bids shall be returned to the Bidder unopened.

ITB.30.4. Written substitution/ modification notice duly signed by an authorized representative of the Bidder in accordance with ITB.29.1 shall be read out and corresponding cover envelopes marked "SUBSTITUTION"/ "MODIFICATION" shall be opened. Substituted Bids shall be exchanged with the corresponding Bid being substituted, which shall not be opened, but returned to the Bidder. In case of single stage two envelope system, technical and financial modifications shall be submitted sealed in two separate envelopes.

ITB.30.5. The following information shall be publicly announced during the Bid opening for the Bidders to note:

a. The name of the Bidder;

b. The presence or absence of Bid security and its amount;

c. The total price offered (applicable for Single Stage Single Envelope);

d. Discounts offered, (applicable for Single Stage Single Envelope);

e. Alternative Bids, if any;

f. Such other details as DGPC may consider appropriate.

ITB.30.6. DGPC shall prepare a record of the Bid Opening, which shall include the information disclosed to those present. The record of the Bid Opening shall include, as a minimum:

a) the NIT title and reference number;

b) the Bid submission deadline date and time;

c) the date, time and place of Bid opening;

d) Bid prices, offered by the Bidders, including any discounts and alternative offers (applicable for single stage single envelope);

e) the presence or absence of Bid Security and, if present, its amount;

f) the name and nationality of each Bidder;

Projects & Contract Department DGPC BHUTAN Contracts Section

g) the names and signature of attendees at the Bid opening, and name of the Bidders they represent (if any);

h) details of any complaints or other comments made by attendees/ representatives attending the Bid opening, including the names and signatures of the attendees/representatives making the complaint(s) and/or comment(s); and

i) the names, designations and signatures of the members of the Bid Opening Committee.

ITB.30.7. The Bidders' representatives who are present shall be requested to sign the record. The omission of a Bidder's representatives' signature on the record shall not invalidate the contents and effect of the record.

ITB.30.8. The Bid form including appendices to Bid form, Bill of Quantities, Price Schedules, Bid Securities, any discounts offered, and any other important documents shall be initialed by all members of the Bid Opening Committee/Tender Committee. All corrections/overwriting will be noted and recorded on each page of the Bill of Quantities. The Bid evaluation will be done using the copies while the original will be kept in safe custody.

ITB.30.9. In the case of Single Stage Two Envelope Bids, on the deadline for submission of Bid the non-financial Bid shall only be opened. The date for opening of the Price Bid shall be intimated at the appropriate time to the Bidders whose Bid is found responsive in the techno-commercial evaluation. The Bid shall be opened on the date and time so specified in the presence of representatives of the Bidder. During the Price Bid opening the following information shall be publicly announced for the Bidders to note:

a. The name of the Bidder;

b. The total price offered;

c. Discounts offered;

d. Alternative Bids, if any;

e. Such other details as DGPC may consider appropriate.

ITB. 31. Confidentiality

ITB.31.1. Except as may be required by law, information relating to the examination, clarification, evaluation, comparison and post-qualification of Bids, and recommendation of Contract Award, or any other matter concerning the Bid shall not be disclosed to Bidders or any other persons not officially concerned with such process after the public opening of the Bids until issuance of the Letter of Award.

ITB.31.2. Subject to ITB. 32, no Bidder shall contact DGPC on any matter related to its Bid from the time of the opening of the Bid to the time the Contract is awarded. Any attempt by a Bidder to influence DGPC in the examination, evaluation, comparison and post-qualification of the Bids or Contract award decisions may result in the rejection of its Bid.

ITB.31.3. Notwithstanding ITB.31.2, from the time of Bid opening to the time of Contract award, if any Bidder wishes to contact DGPC on any matter related to the bidding process, it should do so in writing.

ITB.31.4. The Bidder shall not communicate or use in advertising, publicity or in any other medium, photographs of the Works under this Contract, or description of the Site, dimension, quantity, quality or other information, concerning the Works unless prior written permission has been obtained from DGPC.

ITB.31.5. All documents, correspondence, decisions and other matters concerning the Contract shall be considered of confidential and restricted nature by the Bidder and he shall not divulge or allow access thereto by any unauthorised persons.

Projects & Contract Department DGPC BHUTAN Contracts Section

ITB. 32. Clarification of Bids

ITB.32.1. To assist in the examination, evaluation, comparison and post-qualification of the Bids, DGPC may, at its discretion, ask any Bidder for a clarification on its Bid including justification and breakup of the rates quoted. Any clarification submitted by a Bidder that is not in response to a request by DGPC shall not be considered. The documents/information so submitted in response to DGPC request shall be as of the date prior to the date of the bid submission. Events occurring after the date of submission of the bid shall not be considered for evaluation of the Bid. DGPC's request for clarification and the response thereto shall be in writing. DGPC may also seek any document in support of meeting the Qualification Requirements only for those mentioned in the Bid.

ITB.32.2. No change in the prices or substance of the Bid shall be sought, offered or permitted, except to confirm the correction of arithmetic errors discovered by DGPC in the evaluation of the Bids, in accordance with ITB. 35.

ITB.32.3. If a Bidder does not provide clarifications/documents of its Bid by the date and time set in DGPC's request for clarification, its Bid may be rejected.

ITB. 33. Responsiveness of Bids

ITB.33.1. For the purpose of this clause, a substantially responsive Bid is one which conforms to all the terms, conditions and specifications of the Bidding Documents without material deviation, reservation, objection, conditionality or omission.

ITB.33.2. DGPC shall examine the Bid to confirm that the bid is substantially responsive and all terms and conditions specified in the Bidding Documents have been accepted by the Bidder without any material deviation, reservation, objection, conditionality or omission. DGPC's determination of a Bid's responsiveness shall be based on the contents of the Bid itself without recourse to extrinsic evidence.

ITB.33.3. A material deviation, reservation, objection, conditionality or omission is one that:

a) affects in any substantial way the scope, quality or performance of Contract; or

b) limits in any substantial way or is inconsistent with the Bidding Documents, DGPC's rights or the Bidder's obligations under the proposed Contract; or

c) if rectified would affect unfairly the competitive position of other Bidders presenting responsive Bids; or

d) is incomplete or does not include all the scope of Work covered in the technical specifications.

ITB.33.4. If a Bid is not substantially responsive to the requirements of the Bidding Documents, it shall be rejected by DGPC and the same cannot subsequently be made responsive by the Bidder by correction of the material deviation, reservation, conditionality or omission.

ITB.33.5. DGPC may waive any minor infirmity, non-conformity or irregularity in a Bid that does not constitute a material deviation, reservation or omission, whether or not identified by the Bidder in its Bid and that does not prejudice or affect the relative ranking of any Bidder, as a result of the technical and commercial evaluation pursuant to ITB. 34, ITB. 35 and ITB. 36. DGPC may request that the Bidder submit the necessary information or documentation, within a reasonable period of time, to rectify non-material deviations or omissions in the Bid related to documentation requirements. Such omission shall not be related to any aspect of the price of the Bid. Failure of the Bidder to comply with the request may result in the rejection of the Bid.

ITB. 34. Technical Evaluation

ITB.34.1. DGPC will carry out a detailed technical evaluation of the Bids previously determined to be substantially responsive as per ITB. 33 in order to determine whether the technical

Projects & Contract Department DGPC BHUTAN Contracts Section

aspects are in accordance with the requirements set forth in the Bidding Documents. In order to reach such a determination, DGPC will examine and compare the technical aspects of the bids on the basis of the information supplied by the Bidders, taking into account the following factors:

a) overall completeness and compliance with the Technical Specifications and Drawings as specified in Section VI: Technical Specifications; deviations from the Technical Specifications as identified as per ITB.18.1.2 (m) to the Bid; suitability of the Works/ services offered in relation to the environmental and climatic conditions prevailing at the Site. The Bid that does not meet minimum acceptable standards of completeness, consistency and detail will be rejected for non-responsiveness;

b) Where alternative Bid have been allowed in accordance with ITB. 17, and offered by the Bidder, DGPC will make a similar evaluation of the alternatives. Where alternatives have not been allowed but have been offered, they shall be ignored.

ITB.34.2. At the time of award of Contract, if so desired by the DGPC the Bidder shall withdraw these deviations listed in Form 11 of Section VIIA at the cost of withdrawl stated by him in the Bid. In case the Bidder does not withdraw the deciations proposed by him, if any, at the cost of withdrawal stated in the Bid, his Bid will be rejected and bid security forfeited.

ITB. 35. Correction of Arithmetical Errors in Price Bid

ITB.35.1. Arithmetical errors will be corrected at the time of evaluation of Price Bid and the corrected figure will be considered as evaluated Bid price. The corrections in the Bid price shall be done as per the provisions of this clause and shall be binding on the Bidder. If the Bidder does not accept the correction of errors as per the provisions of this clause, the Bid will be rejected, and the Bid security will be forfeited.

ITB.35.2. If there is a discrepancy between the product of unit price and quantity for any item, and the total price for such item, the product of unit price and quantity will prevail and the total price shall be corrected unless in the opinion of DGPC, there is an obviously gross misplacement of decimal point in the unit rate, or ignoring to put any zero or putting any extra Zero in the unit price in which case, the total of line item as quoted will govern and unit rate will be corrected accordingly.

ITB.35.3. If there is discrepancy between summation of subtotals and total price, the summation of subtotal price shall prevail, and the total price shall be corrected.

ITB.35.4. If there is a discrepancy between words and figure of the total price for each item, wherever the Bid document requires the figures to be written in both words and figures, the amount in words will prevail unless the amount expressed in word has an arithmetic error.

ITB.35.5. In case the Bidder has not filled up unit price against any item, DGPC shall treat the price of unfilled items as zero for the purpose of evaluation, comparison and award (if such Bidder emerges as the lowest evaluated Bidder), with the assumption that the cost have been absorbed elsewhere in the Price Bid.

ITB.35.6. In case price for any specific item is given by a Bidder as lump sum instead of unit rates as required, DGPC reserves the right to arrive at unit rate on the basis of dividing the quoted lump sum amount by the specified quantity in the Bill of Quantity. In case of multiple items if the Bidder has quoted a lump sum price, in the event such Bidder is declared successful, the break-up of unit prices shall be discussed and agreed during the pre-award discussions with the Bidder subject to the lump-sum amount as quoted by the Bidder, and the break-up as agreed shall form part of the Letter of Award.



ITB. 36. Evaluation and Comparison of Bids

ITB.36.1. DGPC shall evaluate each Bid, which has been determined, to be substantially responsive in terms of ITB. 33 and ITB. 34, and Bidders meet the qualification criteria. The evaluation of bids shall be done based on the factors, methodologies and criteria defined in ITB. 36.

ITB.36.2. To evaluate and compare Bids, DGPC shall consider the following:

a) the Bid Price, as quoted in accordance with ITB. 20 in the priced Bill of Quantities;

b) price adjustment for correction of arithmetic errors in accordance with ITB. 35;

c) price adjustment due to discounts offered in accordance with ITB.20.4;

d) The cost of withdrawal of declared deviations as per Form: 11B of Section VIIA and in accordance with ITB.36.4;

e) The domestic preference as may be permitted as per ITB.36.9.

ITB.36.3. DGPC's evaluation of a bid shall exclude and not take into account any allowance for price adjustment during the period of execution of the Contract, if provided in the Bid.

ITB.36.4. The evaluation shall be based on the evaluated cost of fulfilling the Contract in compliance with all commercial, contractual and technical obligations under the Bidding Documents. In arriving at the evaluated cost, the price for withdrawal of deviations shown in Form 11B of Section VIIA of the Bid will be used. Where necessary, if cost of withdrawal of any deviation is not given in the said Form, the DGPC will make its own assessment of the cost of such a deviation for the purpose of ensuring fair comparison of Bids.

ITB.36.5. The total comparison price shall be calculated based on ITB.36.2. DGPC shall compare the total comparison price of all substantially responsive Bids of qualified Bidders to determine the lowest evaluated Bid.

ITB.36.6. If the Bid price of the lowest evaluated Bid appears abnormally low and/or seriously unbalanced, DGPC may require the Bidder to produce written explanations of justifications and detailed price analysis for any or all items of the Bill of Quantities to demonstrate the internal consistency of those prices with the construction methods and schedule proposed. Abnormally low Bid may or may not be accepted. If DGPC decides to accept the abnormally low Bid /or the bid with serious unbalanced rates after considering the above, the Bidder shall be required to provide additional differential security in addition to the performance security equivalent to the difference between the estimated and quoted price to a maximum of (ten percent) 10% of the quoted price, to protect DGPC against any financial loss in the event of default of the successful Bidder under the Contract. If the prices of all the received bids are abnormally high in the discretion of the DGPC, then the DGPC may seek justification from the bidder for the high rates and if necessary negotiate with the lowest evaluated bidder and may reject the bid if considered to be abnormally higher than the estimated cost.

ITB.36.7. The basic consideration and the essence of the Contract shall be the strict adherence to the time schedule specified in the SCC after the Effective Date of the Contract as incorporated in the Contract Agreement for completion of Works. Bidders are required to base their prices on the time schedule given in Section VI, Technical Specifications. No credit will be given for earlier completion for the purpose of evaluation.

ITB.36.8. DGPC reserves the right to accept or reject any variation, deviation or alternative offer. Variations, deviations, alternative offers and other factors which are in excess of the requirements of the Bidding Documents or otherwise result in unsolicited benefits for DGPC shall not be taken into account in Bid evaluation.

ITB.36.9. As indicated in the BDS, Domestic Bidders may receive a margin of preference in Bid evaluation, for which this clause shall apply.

Projects & Contract Department DGPC BHUTAN Contracts Section

ITB.36.10. A domestic Bidder shall provide all evidence necessary to prove that it meets the following criteria to be eligible for a margin of preference in the comparison of its Bid with those of Bidders who do not qualify for the preference.

A domestic bidder shall:

a. Be registered within Bhutan constituted under and governed by the civil, commercial or public law of Bhutan, and have its statutory office, central administration or principal place of business there;

b. Have majority ownership by nationals of Bhutan

c. Not subcontract more than twenty percent (20) percent of the Contract Price, excluding provisional sums, to foreign contractors, suppliers and/or consultants

If there are more than one Domestic Bidder within the five percent range of the L1 evaluated foreign bidder then the Domestic Bidder having the ranking next to the lowest foreign bidder shall be eligible for preference. .

ITB.36.11. JVs, Consortia (C) and Associations (A) of domestic firms may be eligible for the margin of preference provided that:

a) the individual partners satisfy the criteria of eligibility of ITB.36.10 a and b;

b) the JV/C/A is registered in Bhutan;

c) the JV/C/A does not subcontract more than ten percent (10%) of the Contract Price, excluding provisional sums, to foreign firms; and

d) the JV/C/A satisfies any other criteria specified for the purpose of domestic preference eligibility, as specified in the BDS.

ITB.36.12. The procedure used to apply the margin of preference shall be as stipulated in the BDS.

ITB. 37. Post-qualification of the Bidder

ITB.37.1. DGPC shall determine to its satisfaction whether the Bidder selected as having submitted the lowest evaluated responsive Bid is qualified in terms of the qualification requirements stipulated in the BDS and have capacity and capability to perform the Contract.

ITB.37.2. The determination shall be based upon an examination of the documentary evidence, including its authenticity, of the Bidder's qualifications and capacity & capability, submitted by the Bidder as per Form 6: Information for Meeting Qualification Requirement (QR) of SECTION VIIA as well as such other information as the DGPC deems necessary and appropriate.

ITB. 38. Druk Green's Right to Accept any Bid, and to Reject any or all Bids

ITB.38.1. DGPC reserves the right to accept or reject any Bid, and to annul the bidding process and reject all Bids at any time prior to Contract award, without thereby incurring any liability to Bidders or any obligation to inform the affected Bidders of the grounds for such action of the DGPC.

F. AWARD OF CONTRACT

ITB. 39. Award Criteria

ITB.39.1. Subject to ITB. 36 and ITB. 37, DGPC will award the Contract to the successful Bidder whose Bid has been determined to be substantially responsive and to be the lowest evaluated Bid based on Bid evaluation and the Bidder meets the standards of capability and financial resources as provided in the Bidding Documents. DGPC shall be the sole judge in this regard.

Projects & Contract Department DGPC BHUTAN Contracts Section

ITB. 40. Notification of Award

ITB.40.1. Prior to expiry of the period of Bid validity, DGPC will notify the successful Bidder, by a notification of award or in the form of letter of intent/ letter of award, in writing, that its Bid has been accepted indicating the award price.The successful bidder shall return a copy of the Letter of Award to DGPC after duly recording "Accepted Unconditionally" under the signature of the authorised signatory within seven (7) days of the date of notification of award.

ITB.40.2. Until a formal Contract is prepared and executed, the notificaion of award shall constitute a binding Contract between the successful Bidder and DGPC.

ITB.40.3. Upon the successful Bidder's furnishing of the performance security pursuant to ITB. 43, DGPC will promptly notify each unsuccessful Bidder and will return its Bid Security.

ITB. 41. Debriefing by DGPC

ITB.41.1. On receipt of DGPC's Notification of Award referred to in ITB. 40, an unsuccessful bidder has three (3) working days to make a written request to DGPC for a debriefing. DGPC shall provide a debriefing to all unsuccessful bidders whose request has been received within this deadline.

ITB.41.2. Where a request for debriefing has been received within the deadline, DGPC shall provide a debriefing within five (5) working days.

ITB.41.3. DGPC shall discuss only such Bid and not the bids of other competitors. The debriefing shall not include:

a. point-by-point comparisons with another Bid; and

b. information that is confidential or commercially sensitive to other Bidders.

ITB.41.4. The Purpose of debriefing is to inform the aggrieved bidder of the reasons for lack of success, pointing out the specific shortcomings in its bid without disclosing contents of other bids.

ITB. 42. Signing of Contract Agreement

ITB.42.1. Upon accepting the unconditional "Letter of Award", the successful bidder will submit the Performance Security to DGPC within thirty (30) days of Letter of Award.

ITB.42.2. Once the Performance Security is received, DGPC shall send the successful Bidder the Contract Agreement as per Form 19 of Section VIIB.

ITB.42.2.1. Within thirty (30) days of receipt of the Contract Agreement, the successful Bidder shall sign, date and return the Contract Agreement to DGPC.

ITB. 43. Contract Performance Security

ITB.43.1. The successful Bidder shall submit the performance security equal to ten percent (10%) of the Contract Price in accordance with GCC.18. The performance security shall be valid till thirty (30) days beyond the Defect Liability Period. DGPC reserves the right to verify independently the genuineness of the performance security from the issuing bank or a correspondent bank of such issuing bank in the Kingdom of Bhutan.

ITB.43.2. The performance security shall be submitted as an irrevocable bank guarantee in the form provided for in Form 20 of Section VIIB. The Performance Security can also be submitted in the form of demand draft if so specified in the BDS.

ITB.43.3. Failure of the successful Bidder to submit the above-mentioned performance security or accept the award or sign the Contract shall constitute sufficient grounds for the annulment of the award and forfeiture of the Bid security. In that event DGPC may award the Contract to the next lowest evaluated Bidder whose offer is substantially responsive and



is determined by DGPC to be qualified to perform the Contract satisfactorily or call for fresh bids.

ITB.43.4. The validity of the Performance Security shall be extended by the successful bidder whenever any time extension for contract completion is granted by DGPC.

ITB.43.5. If the contractor fails to remedy any reported defect within the Defect Liability Period, the DGPC shall be entitled to remedy the defect at the expense of the successful Bidder and appropriate the cost of such remedying defects out of the Performance Security.

ITB.43.6. On completion of the Defects Liability Period, the Project Manager shall issue a no Defect Liability Certificate to the contractor and release the retention money and/ or bank guarantee as available within fifteen (15) days from the issue of certificate.

ITB. 44. Retention Money

ITB.44.1. If the Executed Contract value exceeds Contract Value, then Retention Money of 10% of the exceeded amount in addition to the Performance security already submitted shall be deducted from the running bills and retained till the end of the Defect Liability Period.

ITB.44.2. The Retention Money or part thereof may be returned to the contractor on completion of the Defect Liability Period. After completion of the work, the retention money may be returned to the contractor against his submission of an bank guarantee, acceptable to the Procuring agency. Such bank guarantee shall be valid until the issue of a No Defect Liability Certificate.

ITB.44.3. If the contractor fails to remedy any reported defect within the Defects Liability Period, the DGPC shall withhold the payment or realize claims from the Retention Money, of an amount, which in the opinion of the DGPC, represent the cost of the defects to be remedied

ITB.44.4. On completion of the Defects Liability Period, the Engineer In-charge shall issue a no Defect Liability Certificate to the contractor and release the retention money and/ or bank guarantee as available within fifteen (15) days from the issue of certificate.

G. PERFORMANCE EVALUATION

ITB. 45. Performance Evaluation of Contractor

ITB.45.1. A contractor performance evaluation is a standardized, systematic and objective assessment of a contractor's performance on a specific project contract.

ITB.45.2. The performance evaluation criteria shall be used by each Project Manager/Site Engineer immediately with the commencement of any work or services after the award of contract. The contractors shall be evaluated as the work progresses.

ITB.45.3. The Performance Evaluation System for Contractors is described at SECTION VIII of this Bidding Document.

ITB.45.4. The Contractor is required to sign and submit Form 14: Performance Evaluation System Acceptance along with their bid.



SECTION III – BID DATA SHEET



BID DATA SHEET

The following Bid specific data for the Works to be procured shall amend and/or supplement the clauses in the Instructions to Bidders (ITB). Whenever there is a conflict, the provisions herein shall prevail over those in the ITB.

ITB Clause Reference	Data
	A. INTRODUCTION
ITB.2.1	DGPC intends to finance this procurement through **Internal Sources**
ITB 5.4	The Bidder "is not" required to be represented by an agent in Bhutan.
ITB.7.2	Insert names of the countries from which contracting of Works or any payments to persons or entities in that country are prohibited. Name of the countries: **Nil**
ITB.8.1 and ITB.18.1.2(k)	Participation in the form of a Joint Venture (JV) or Consortium is permitted, subject to the following conditions: • The JV/Consortium shall consist of a maximum of two (2) partners. • The qualification requirements may be satisfied either: ✓ solely by the Lead Partner of the JV/Consortium, or ✓ collectively by both partners of the JV/Consortium. In this case the qualification criteria will be assessed on a combined basis. Both partners of the JV/Consortium shall be jointly and severally liable for the execution of the entire Contract in accordance with its terms. The Bid shall include a copy of the JV/Consortium Agreement, or a Letter of Intent to form one signed by both partners. It shall name the Lead Partner and state each partner's proposed share and role in the Works. One of the partners shall be designated as the Lead Partner. The Lead Partner shall be authorized to represent and bind the JV/Consortium, and to receive instructions for and on behalf of both partners, for the purposes of this Contract. The Lead Partner shall sign the Bid and any contractual obligations resulting from the award of Contract on behalf of the JV/Consortium.
	B. BIDDING DOCUMENTS
ITB.11.1	Clarifications on Bidding Documents may be obtained from Sonam Choden Manager, Contracts Section Druk Green Power Corporation Limited 1168 Serbi Lam Southeast Thimphu 11001; Bhutan Tel: +975-2-339875 Email: dgpccotenders@drukgreen.bt
ITB.11.2	DGPC will issue clarification(s) in writing not later than **five (5) days** prior to the deadline/extended deadline for submission of Bids.



ITB Clause Reference	Data
ITB.11.4	Date & Time up to which clarification requests will be received: Date: **November 21, 2026** Time (Bhutan Time): **1700 hrs**
ITB.13.1	Pre-bid Meeting: **Only if required**
ITB.14.1	DGPC may amend the Bidding Documents by issuing an addendum/amendment **one (1) day** prior to the bid submission deadline.
C. PREPARATION OF BIDS	
ITB.17.1	Alternative Bids **"shall not be"** permitted.
ITB.18.1.2(a)	Non-submission of Integrity Pact Statement duly executed by the bidder, as per Form: 3 of Section VIIA shall be rejected.
ITB.18.1.2(d)	Deviation to any of these clauses anywhere in the Bid shall not be permitted: i. Governing Laws GCC.8 ii. Settlement of Disputes GCC.9 iii. Contract Performance Security GCC.18 iv. Patent Indemnity GCC.22 v. Limitations of Liability GCC.38
ITB.18.1.2(f)	A **Power of Attorney** as per Form: 5 of Section VIIA shall be submitted if the signatory to the bid is other than the CEO/License holder. Non-submission of the same shall result in rejection of the bid.
ITB.18.1.2 (g)	In addition to the requirements specified in the Bidding Documents, the following minimum Qualifying Requirement has to be met by the Bidder as per Section VIIA Bidding Forms: **(A) Technical** i. Bidders Experience: Experience of having successfully completed at least 1 (one) similar work during the last five (5) years. Bidder shall submit a copy of the work order/Contract Agreement/completion certificate. ii. The key construction equipment to be made available for the Contract by the Bidder shall be:

ITB Clause Reference	Data

SN	Equipment	Qty.	Remarks
1	LiDAR Drone	1 set	The drone should have RTK integration and be suitable for conducting topographic surveys and mapping of the whole project layout using LiDAR sensor.
2	GNSS RTK	2 set	High-accuracy multi-frequency GNSS RTK system (1 Base + 2 Rovers) for Control Survey & Establishment of Permanent Control Points (as per DGPC requirement in BOQ), topographic survey of Dam Area, Powerhouse, Surge Shaft & TRT and supporting LiDAR ground control.
3	ADCP/bathymetric equipment or equivalent (if required)	1 set	High-accuracy Echo Sounder equipment for Longitudinal Profile (L-Section) and River Cross-Sections (X-Sections). The system must provide centimeter-level accuracy in river bathymetric survey.

The bidder shall submit proof of ownership for the above equipment. In case of hiring, the bidder shall submit the hiring agreement. The equipment shall not be older than 10 years from the date of invoice/date of registration.

(i) The skilled and experienced manpower required for the timely and quality execution of the work to be made available for the Contract by the Bidder shall be:

SN	Personnel	Qty.	Qualification and Experience
1	Drone Pilot	1 No.	Should have drone license or flyer ID accepted by BCAA with minimum field experience of 3-5 years and with experience in drone image processing, GIS, Remote Sensing, Photogrammetry and the use ofGNSS and all other surveying instruments.
2	Survey Engineer	1 No.	Minimum qualification in BE Surveying and Geoinformatics (or equivalent) and minimum experience of 2-5 years in drone image processing, GIS, Remote Sensing, Photogrammetry and the use of GNSS and all other surveying instruments.
3	Surveyor	1 No.	Minimum qualification of Diploma in Survey and experience of 2-5 years in the use of GNSS and all other surveying instruments.

The Bidder shall submit the following:

i. Qualification Certificate
ii. CVs/proof of experience of similar works from the employer

Projects & Contract Department DGPC BHUTAN Contracts Section

ITB Clause Reference	Data
ITB.20.2	In addition, the unit rates/prices quoted in the Bill of Quantities shall be exclusive of Goods and Services Tax (GST). GST at 5% shall be paid by DGPC as per the revised charged basis.
ITB.21.1 and ITB.21.2	The prices quoted by the Bidder **"shall not"** be adjustable.
ITB.22.1	The Currencies of Bid shall be: **BTN & INR**
ITB.23.1	The Bids shall be valid till: **March 7, 2027**
ITB.24.1	The amount and currency of the Bid Security shall be **183,000.00 [Bhutanese Ngultrum one hundred eighty-three thousand] only** Bid Security in the form of: i. Cash Warrant/Demand Draft/Banker's Cheque ii. Unconditional Bank Guarantee as per FORM-1 issued by a financial institution of Bhutan or any foreign bank acceptable and enforceable in any financial institution of Bhutan iii. Under exceptional case of not meeting i & ii, Bidders shall be allowed to deposit Bid Security in the form of cash deposit through bank transfer to DGPC Account. Deposit slip to be submitted along with the bids.
ITB.24.2(d)	The Bid Security shall be valid till: **April 6, 2026**
ITB.25.1	In addition to the original of the Bid, the number of copies of the Bid required shall be: **One Copy incase of hard copy submission**
D. SUBMISSION OF BIDS	
ITB.26.2 and ITB.26.3	Bids to be addressed to and submitted to: Sonam Choden Manager, Contracts Section Druk Green Power Corporation Limited 1168 Serbi Lam Southeast Thimphu 11001; Bhutan Tel: +975-2-339875 Email: dgpccotenders@drukgreen.bt Date & Time (Bhutan Time) up to which Bids will be received: Date: **December 7, 2026** Time: **1500 hrs**
ITB.26.4	The Mode of Tendering is **"Single Stage Single Envelope"**
ITB.26.4.1	**1. Single Stage Single Envelope** **Superscript of Cover Envelope**: "CONFIDENTIAL" Bid for **Carrying out Topographical Survey and Mapping for Minjey & Phawan Hydropower Projects** bearing Tender No. **CO 0037/2026 dated November 21, 2026** Name and address of Bidder: ……...

ITB Clause Reference	Data
	Not to be Opened Before Due Date for Opening on: **December 7, 2026** at **1530 hrs** Sonam Choden Manager, Contracts Section Druk Green Power Corporation Limited 1168 Serbi Lam Southeast Thimphu 11001; Bhutan Tel: +975-2-339875 Email: dgpccotenders@drukgreen.bt **Superscript of Envelope 1**: Bid **Carrying out Topographical Survey and Mapping for Minjey & Phawan Hydropower Projects** bearing Tender No. **CO 0037/2026 dated November 21, 2026** Name of Bidder: ..... **Superscript of Envelope 2**: Bid **Carrying out Topographical Survey and Mapping for Minjey & Phawan Hydropower Projects** bearing Tender No. **CO 0037/2026 dated November 21, 2026** Name and address of Bidder: ……... Not to be Opened Before Due Date for Opening on: **December 7, 2026 at 1530 hrs**
ITB.26.5	Bidders ***"shall"*** have the option of submitting their Bids electronically. **Sonam Choden** Manager, Contracts Section Projects and Contract Department Druk Green Power Corporation Limited 1168 Serbi Lam Southeast Thimphu 11001; Bhutan. Tel: +975-2-339875 Email: dgpccotenders@drukgreen.bt Bidders may also submit proposals electronically in PDF format. Such proposals shall be password-protected. The password must be submitted by email to the Tender Committee on the date of proposal opening, prior to 1500 hours BST. The password and access to the Contents shall remain valid and unchanged throughout the Proposal validity period, and restricted to authorized representatives of DGPC.
E. BID OPENING, EVALUATION AND COMPARISON	
ITB.30.1	Venue: Contracts Section Office, DGPC, Thimphu Date: **December 7, 2026** Time (Bhutan Time): **1530 hrs**
ITB.36.9	Margin of domestic preference **"shall not"** apply



ITB Clause Reference	Data
ITB.36.11(d)	Other criteria to be used for the purpose of assessing domestic preference eligibility are: **Not Applicable**
ITB.36.12	The procedure used to apply the margin of preference shall be: **Not Applicable**
F. Award of Contract	
ITB.43.2	The Contract Performance Security shall be submitted in the form of an irrevocable Bank Guarantee/demand draft.

Projects & Contract Department
DGPC
BHUTAN
Contracts Section

SECTION IV – GENERAL CONDITIONS OF CONTRACT



SECTION IV – GENERAL CONDITIONS OF CONTRACT

A. CONTRACT AND INTERPRETATION

GCC.1. Definitions

GCC.1.1. The following words and expressions shall have the meaning hereby assigned to them except where the context otherwise requires.

i) "Affiliate" means business concerns, organisations, or individuals that control each other or that are controlled by a common third party. Control may include shared management or ownership, common use of facilities, equipments and employees; or family interest;

ii) "Bid" means an offer to execute the Works submitted by the Bidder to DGPC in accordance with the terms and conditions set out in the Bidding Documents inviting such offers. The term "Tender" is synonymous with the term "Bid";

iii) "BDS" means the Bid Data Sheet;

iv) "Bidder" means an eligible legal entity or Joint Venture that participates in a competitive bidding process governed by the Bidding Documents; the terms "Bidder" and "Tenderer" are synonymous;

v) "Bill of Quantities" means the priced and completed Bill of Quantities forming part of the Bid;

vi) "Bidding Documents" means the set of documents issued by DGPC to potential Bidders in which the specifications, terms and conditions of the proposed procurement are prescribed. The terms "Bidding Documents", "Tender Documents" and "Bid Documents" are synonymous;

vii) "Contract" means formal agreement(s) in writing entered into between DGPC and the Contractor on mutually agreed terms and conditions including the Contract Documents referred therein and amendments thereto pursuant to the Letter of Award issued by DGPC and accepted by the Contractor and which are in compliance with all the relevant provisions of the Governing Law of the Contract as per GCC.8;

viii) "Contract Document" means the documents referred in Contract Agreement and shall in particular, consist of documents specified in GCC.2.5 including any amendments thereto;

ix) "Contract Price" means the aggregate price payable to the Contractor as specified in the Contract at the time of award, subject to such additions and adjustments thereto or deductions therefrom as may be made pursuant to the provisions of the Contract till the completion of the contract, the price so adjusted shall be termed as Executed Price;

x) "Contractor" means the Bidder whose Bid to perform the Contract has been accepted by DGPC and is named as such in the Contract Agreement, and includes the legal successors or permitted assigns of the Contractor;

xi) "Contractor's Representative" means any person nominated or appointed by the Contractor from time to time and approved by DGPC in the manner provided in GCC.23.2 hereof to perform the duties assigned by the Contractor;

xii) "Contractor's Equipment" means all facilities, equipment, machinery, tools, apparatus, appliances, vehicles or things of every kind required for erection, completion and maintenance of Works that are to be provided by the

Projects & Contract Department DGPC BHUTAN Contracts Section

Contractor, but does not include plant, equipment, materials or other things intended to form or forming part of the Works and DGPC's Equipment, if any;

xiii) "Day" means calendar day of the Gregorian calendar. However, "Working day" as used herein means all calendar days excluding Sundays and Government holidays in the Kingdom of Bhutan;

xiv) "DGPC" means Druk Green Power Corporation Limited including its successors and permitted assigns;

xv) "DGPC's Equipments" means the apparatus, machinery and vehicles (if any) made available by DGPC for the use of the Contractor in the execution of the Works, as stated in the Technical Specifications; but does not include plant which has not been taken over by DGPC;

xvi) "Drawings" means the drawings of the Works, as included in the Contract, and any additional and modified drawings issued by or on behalf of DGPC in accordance with the Contract;

xvii) "Defect Liability Period" means the period of validity of the warranties given by the Contractor commencing at completion of the Works or a part thereof, if separate completion of the Works for such part has been provided in the Contract, during which the Contractor is responsible for defects with respect to the Works (or the relevant part thereof) as provided in GCC.37 hereof;

xviii) "Effective Date" means the date of Letter of Award, or any other date as specified in the Contract Agreement, from which the Time for Completion shall be determined;

xix) "Foreign Bidder" means any Bidder other than the Domestic Bidder;

xx) "GCC" means General Conditions of Contract;

xxi) "ITB" means Instructions to Bidders;

xxii) "Joint Venture (JV)" means an association of legal entities that pool their resources and skills to undertake a large or complex Contract in the role as a Contractor, with all legal entities (members in the JV) being legally liable, jointly and severally, for the execution of the Contract in the event of a member's withdrawal;

xxiii) "Letter of Award" (LoA) means the letter issued by DGPC conveying the acceptance of the Bid of the successful Bidder subject to such terms and conditions as may have been stated therein;

xxiv) "Month" means calendar month of the Gregorian Calendar;

xxv) "Party" means the DGPC or the Contractor, as the context requires, and "Parties" means both of them;

xxvi) "Project Manager" means the person appointed by DGPC from time to time in the manner provided in GCC.23.1 hereof and named as such in the SCC to perform the duties delegated by DGPC inter-alia to direct, supervise and be in-charge of the Works for the purposes of the Contract and shall also include the duly authorized representative of such Project Manager;

xxvii) "RGoB" means the Royal Government of Bhutan;

xxviii) "SCC" means the Special Conditions of Contract;

Projects & Contract Department DGPC BHUTAN Contracts Section

xxix) "Site" means the land and other places where the Works are to beexecuted, and to which plant and materials are to be delivered and such other land or places as may be specified in the Contract as forming part of the Site;

xxx) "Subcontractor" means any person to whom execution of any part of the Works, including preparation of any design or supply of anyplant, equipment or materials, is sub-contracted directly or indirectly by the Contractor with the consent of DGPC, and includes its legal successors or permitted assigns;

xxxi) "Time for Completion" means the time within which completion of the Works as a whole (or of a part of the Works where a separate Time for Completion of such part has been prescribed) is to be attained in accordance with the stipulations in the SCC and the relevant provisions of the Contract;

xxxii) "Technical Specifications" means specifications of the Works incorporated in the Bidding Documents and forming part of the Contract and includes any modification or amendment thereto or any addition thereto or any deduction therefrom, as may be made with the mutual agreement of DGPC and Contractor;

xxxiii) "Works" shall mean the total work to be executed in accordance with the Contract or part(s) thereof, as the case may be, and shall include all extra or additional, altered or substituted works or temporary/enabling works and urgent works as required for performance of the Contract.

GCC.2. Contract Documents

GCC.2.1. All documents forming part of the Contract (and all parts thereof) are intended to be correlative, complementary and mutually explanatory of one another. The Contract shall be read as a whole. The detailed Drawings being followed shall be in preference to small scale Drawings, figured dimensions in preference to scale and SCC in preference to GCC. In the case of discrepancy between Bill of Quantities, the Technical Specifications and/or the Drawings, the following order of precedence shall govern:

a. Description in Bill of Quantities

b. Particular specifications and special conditions, if any

c. Drawings

d. General Technical Specifications

GCC.2.2. If there are varying or conflicting provisions made within any document forming part of the Contract, the Project Manager shall be the deciding authority with regard to the intention of the document.

GCC.2.3. Any error in description, quantity or rate in Bill of Quantities or any omission therefrom shall not vitiate the Contract or release the Contractor from the execution of the whole or any part of the Works comprised therein according to Drawings and Technical Specifications or from any of his obligation under the Contract.

GCC.2.4. The Contract Agreement will be signed as provided in the Letter of Award in two (2) originals and the Contractor shall be provided with one signed original and the other original will be retained by DGPC. The cost of stamp duties imposed by law in connection with entry onto the Contract Agreement shall be borne by DGPC.

GCC.2.5. The Contract Document shall consist of all the engineering data, drawings and descriptive materials submitted with the Bid, complete set of Bid and Bidding Documents, copies of all the correspondence with DGPC, and any other documents as may be specified by DGPC.

Projects & Contract Department DGPC BHUTAN Contracts Section

GCC.2.6. The Contractor shall not, without DGPC's prior written consent, disclose the Contract, or any provision thereof, or any specification, drawing, pattern, sample or information furnished by or on behalf of DGPC in connection therewith, to any person other than a person employed by the Contractor in the performance of the Contract. Disclosure to any such employed person or any entity shall be made in confidence and shall extend only as far as necessary for purposes of such performance.

GCC.2.7. The Contractor shall not, without DGPC's prior written consent, make use of any document or information specified in GCC.2.6 above except for the purpose of performing the Contract.

GCC.3. Interpretation

GCC.3.1. In the Contract, except where the context requires otherwise:

a. words indicating one gender include all genders;

b. words indicating the singular also include the plural and words indicating the plural also include the singular;

c. provisions including the word "agree," "agreed," or "agreement" require the agreement to be recorded in writing; and

d. "written" or "in writing" means hand-written, type-written, printed or electronically made, and resulting in a permanent record.

The headings and sub-headings to these GCC shall not be deemed to form part thereof or be taken into consideration in the interpretation of these conditions.

GCC.3.2. "Month" and "Year" and all dates shall be reckoned according to the Gregorian calendar.

GCC.3.3. A "law" shall be construed as a reference to such law including its amendments or re-enactments from time to time.

GCC.3.4. A "person" shall be construed as a reference to any person, firm, company, corporation, society, trust, government, or agency of a government or any association or partnership (whether or not having separate legal personality) of two or more of the above and a person shall be construed as including a reference to its successors, permitted transferees and permitted assigns in accordance with their respective interests.

GCC.3.5. The words "hereof" or "herein" if and when used in the Contract Documents shall mean a reference to the Contract Documents of this Contract.

GCC.3.6. Amendment

No amendment or other variation of the Contract shall be effective unless it is in writing, is dated, expressly refers to the Contract, and is signed by duly authorized representatives of DGPC and the Contractor.

GCC.3.7. Non-waiver

a. Subject to GCC.3.7(b) below, no relaxation, forbearance, delay or indulgence by either Party in enforcing any of the terms and conditions of the Contract or the granting of time by either Party to the other shall prejudice, affect or restrict the rights of that Party under the Contract, nor shall any waiver by either Party of any breach of Contract operate as waiver of any subsequent or continuing breach of Contract;

b. Any waiver of a Party's rights, powers or remedies under the Contract must be in writing, dated and signed by an authorized representative of the Party granting such waiver, and must specify the right and the extent to which it is being waived.

GCC.3.8. Severability



If any provision or condition of the Contract is prohibited or rendered invalid or unenforceable, such prohibition, invalidity or unenforceability shall not affect the validity or enforceability of any other provisions and conditions of the Contract.

GCC.3.9. Effect

The Contract shall be deemed to have come into full force and effect from the date of Letter of Award or any other date as specified in the SCC. This date shall be considered as the Effective Date of the Contract. The Time for Completion shall be reckoned from the Effective Date.

GCC.3.10. Entire Agreement

The Contract constitutes the entire agreement between DGPC and the Contractor, with respect to the subject matter of Contract, and supersedes all communications, negotiations and agreements (whether written or oral) of the Parties with respect thereto made prior to the date of Contract.

GCC.3.11. Responsibility

The Contractor shall be an independent contractor performing the Contract. The Contract does not create any agency, partnership, joint venture or other joint relationship between the Parties hereto. Subject to the provisions of the Contract, the Contractor shall be solely responsible for the manner in which the Contract is performed. All employees, Subcontractors and representatives, engaged by the Contractor in connection with the performance of the Contract, shall be under the complete control of the Contractor and shall not be deemed to be employees of DGPC, and nothing contained in the Contract, or in any sub-contract awarded by the Contractor, shall be construed to create any contractual relationship between any such employees, representatives, or Subcontractors and DGPC.

GCC.4. Fraud and Corruption

GCC.4.1. If DGPC determines that the Contractor and/or any of its personnel, or its agents, or its Subcontractors, and/or their employees has engaged in corrupt, fraudulent, collusive coercive, or obstructive practices, in competing for or in executing the Contract, then DGPC may, after giving fifteen (15) days notice to the Contractor, terminate the Contract and expel him from the Site, and the provisions of GCC.48 shall apply as if such expulsion had been made under GCC.49.1.2.

GCC.4.2. For the purposes of this sub-clause,

a. "corrupt practice" is the offering, giving, receiving or soliciting, directly or indirectly, of anything of value to influence improperly the actions of another party;

b. "fraudulent practice" is any act or omission, including a misrepresentation, suppression of facts or disclosure of incomplete facts that knowingly or recklessly misleads, or attempts to mislead, a party to obtain a financial or other benefit or to avoid an obligation or to influence the procurement process;

c. "collusive practice" is an arrangement between two or more parties designed to achieve an improper purpose, including to influence improperly the actions of another party;

d. "coercive practice" is impairing or harming, or threatening to impair or harm, directly or indirectly, any party or the property of the party to influence improperly the actions of a party in connection with the procurement process;

e. "obstructive practice"is

Projects & Contract Department DGPC BHUTAN Contracts Section

i. deliberately destroying, falsifying, altering or concealing of evidence material to the investigation or making false statements to investigators in order to materially impede any investigation into allegations of a corrupt, fraudulent, coercive or collusive practice; and/or threatening, harassing or intimidating any party to prevent it from disclosing its knowledge of matters relevant to the investigation or from pursuing the investigation, or

ii. acts intended materially to impede the exercise of the inspection rights of DGPC or any organization or person appointed by DGPC

GCC.4.3. Any communications between the supplier and DGPC related to matters of alleged fraud or corruption must be made in writing.

GCC.5. Language

GCC.5.1. The Contract, as well as all correspondence and documents relating to the Contract exchanged between the Contractor and DGPC, shall be written in English. Supporting documents and printed literature that are part of the Contract may be in another language provided they are accompanied by an accurate translation of the relevant passages in English, in which case, for purposes of interpretation of the Contract, the translation shall govern.

GCC.5.2. The Contractor shall bear all costs of translation to the governing language and all risks of the accuracy of such translation, for documents provided by the Contractor.

GCC.6. Joint Venture

GCC.6.1. If the Contractor is a Joint Venture, all such parties shall be deemed to be jointly and severally liable to DGPC for the fulfilment of the obligations under the Contract and shall designate one of such Party to act as a leader with authority to bind the Joint Venture. The composition or the constitution of the Joint Venture shall not be altered without the prior consent of DGPC.

GCC.7. Notices

GCC.7.1. Notices shall be deemed to include any approvals, consents, instructions, orders, determinations and certificates to be given under the Contract.

GCC.7.2. Unless otherwise stated in the Contract, all notices to be given under the Contract shall be in writing to the address specified in the Contract.

GCC.7.3. Any notice delivered personally or sent by fax or electronic mail shall be deemed to have been delivered on date of its despatch.

GCC.7.4. Either Party may change its address at which notices are to be received by giving ten (10) days notice to other Party in writing.

GCC.8. Governing Law

GCC.8.1. The Contract shall be governed by and interpreted in accordance with the laws of the Kingdom of Bhutan. The courts of Thimphu shall have exclusive jurisdiction in all matters arising out of the Contract unless otherwise stated in the SCC.

GCC.8.2. The Contractor shall, in all matters arising in the performance of the Contract, obtain all permits, licenses and approvals as required by law, give all notices and pay all taxes, duties and fees required by the provisions of any statute, ordinance or other law or any regulation or by-law of any duly constituted authority of the Kingdom of Bhutan in relation to the design, execution and completion of Works and the remedying of any defects.

GCC.8.3. The Contractor shall indemnify and hold harmless DGPC from and against any and all liabilities, damages, claims, fines, penalties and expenses of whatever nature arising or

Projects & Contract Department DGPC BHUTAN Contracts Section

resulting from the violation of such laws by the Contractor or its personnel including its Subcontractors and their employees.

GCC.9. Settlement of Disputes

GCC.9.1. Amicable Settlement

GCC.9.1.1. DGPC and the Contractor shall make every effort to resolve amicbley by direct informal negotiation of any disagreement or dispute arising between them under or in connection with the contract.

GCC.9.1.2. If the parties fail to resolve such a dispute or difference by mutual consultation within 30 days from commencement of such consultation, either part may require that the dispute be referred for resolution to the formal mechanisms specified in the SCC.

GCC.9.2. Adjudication

GCC.9.2.1. If any dispute of any kind whatsoever shall arise between DGPC and the Contractor in connection with or arising out of the Contract, including without prejudice to the generality of the foregoing, any question regarding its existence, validity or termination, or the execution of the Works– whether during the progress of the Works or after their completion and whether before or after the termination, abandonment or breach of the Contract – the Parties shall seek to resolve any such dispute or difference by mutual consultation. If the Parties fail to resolve such a dispute or difference by mutual consultation, then the dispute shall be referred in writing by either Party to the Adjudicator, with a copy to the other Party.

GCC.9.2.2. The Adjudicator shall be jointly appointed by DGPC and the Contractor under the Contract. Failing agreement between the two within thirty (30) days, the Adjudicator shall be appointed under the Contract on the request of either Party by the Appointing Authority specified in the SCC. The Adjudicator so appointed shall be by mutual consent.

GCC.9.2.3. The Adjudicator shall give its decision in writing to both Parties within thirty (30) days of a dispute being referred to it. If the Adjudicator has done so, and no notice of intention to commence arbitration has been given by either DGPC or the Contractor within fifty-six (56) days of such reference, the decision shall become final and binding upon DGPC and the Contractor. Any decision that has become final and binding shall be implemented by the Parties forthwith.

GCC.9.2.4. Should the Adjudicator resign or die, or should DGPC and the Contractor agree that the Adjudicator is not fulfilling its functions in accordance with the provisions of the Contract; another Adjudicator shall be appointed in the same manner as provided in GCC.9.2.2.

GCC.9.2.5. The Adjudicator shall be paid fee plus expenditures incurred in the execution of its duties as Adjudicator under the Contract as specified in the SCC. These costs shall be divided equally between DGPC and the Contractor.

GCC.9.3. Arbitration

GCC.9.3.1. If either DGPC or the Contractor is dissatisfied with the Adjudicator's decision, or if the Adjudicator fails to give a decision within forty-five (45) days of a dispute being referred to it, then either DGPC or the Contractor may, within sixty(60) days of such reference, give notice to the other Party, with a copy for information to the Adjudicator, of its intention to commence arbitration, as hereinafter provided, as to the matter in dispute, and no arbitration in respect of this matter may be commenced unless such notice is given.

GCC.9.3.2. Any dispute, in respect of which a notice of intention to commence arbitration has been given, in accordance with GCC.9.3.1, shall be finally settled by arbitration. Arbitration may be commenced prior to or after completion of the Works.

GCC.9.3.3. Arbitration proceedings shall be conducted:

Projects & Contract Department DGPC BHUTAN Contracts Section

a) in accordance with the rules of procedure designated in the SCC,

b) in the place designated in the SCC and

c) in the language in which this Contract has been executed.

GCC.9.3.4. The arbitrators shall also decide on the cost of arbitration and allocation thereof. The expenses incurred by each Party in connection with the preparation and presentation of its case prior to, during and after the arbitration proceedings shall however be borne by the respective Party.

GCC.9.4. Notwithstanding any reference to the Adjudicator or arbitration herein:

a) the Parties shall continue to perform their respective obligations under the Contract unless they otherwise agree; and

b) DGPC shall pay the Contractor any monies due to it.

GCC.9.5. The arbitration award shall be final on the Parties who shall be deemed to have accepted to carry out the resulting award without delay and to have waived their right to any form of appeal insofar as such waiver can validly be made.

B. SUBJECT MATTER OF CONTRACT

GCC.10. Scope of Contract

GCC.10.1. The Works to be carried out under the Contract shall be as delineated in the Bidding Documents including the Technical Specifications and shall, except as otherwise provided in these conditions, include all labour, materials, tools, plant, equipment and transport which may be required in preparation of and for full and entire execution and completion of the Works.

GCC.10.2. The Contractor shall design, execute and complete the Works in accordance with the Contract and with the Project Manager's instructions, and shall remedy any defects in the Works.

GCC.10.3. The Contractor shall arrange all inputs including but not limited to Contractor's personnel, materials, consumables and other things and services, whether of a temporary or permanent nature, required in and for design, execution, completion and remedying of defects in the Works.

GCC.10.4. The Contractor shall acquire and pay for all permits, approvals and/or licenses from all government authorities or public service undertakings in the Kingdom of Bhutan, which such authorities or undertakings require Contractor to obtain in its own name for the execution of the Contract. If requested by the Contractor, DGPC shall use its best endeavours to assist the Contractor in obtaining in a timely and expeditious manner all permits, approvals and/or licenses necessary for the execution of the Contract from all government authorities or public service undertakings that such authorities or undertakings require the Contractor or Subcontractors or the personnel of the Contractor or Subcontractors, as the case may be.

GCC.10.5. The Contractor shall be responsible for the adequacy, stability, and safety of all Site operations and of all methods of construction. The Contractor (i) shall be responsible for all Contractor's documents, temporary works and design of each item of plant, equipment or materials as is required for the items of works included in the Bill of Quantities as per the Technical Specifications and (ii) shall not otherwise be responsible for the design or specification of the permanent Works.

GCC.10.6. The Contractor shall, whenever required by the Project Manager, submit details of the arrangements and methods which the Contractor proposes to adopt for the execution of

Projects & Contract Department DGPC BHUTAN Contracts Section

the Works. No significant alteration to these arrangements and methods shall be made without this having previously been notified to the Project Manager.

GCC.10.7. If the Contract specifies that the Contractor shall design any part of the permanent Works, then unless otherwise stated:

a) the Contractor shall submit to the Project Manager the Contractor's documents for this part in accordance with the procedures specified in the Technical Specifications;

b) these Contractor's documents shall be in accordance with the Technical Specification and Drawings, shall be written in the language for communications defined in GCC.5;

c) the Contractor shall be responsible for this part and it shall, when the Works are completed, be fit for such purposes for which the part is intended as are specified in the Contract; and

d) prior to the commencement of the tests on completion, the Contractor shall submit to the Project Manager the "as- built" Drawings and operation and maintenance manuals in accordance with the Technical Specification and in sufficient detail for the Project Manager to operate, maintain, dismantle, reassemble, adjust and repair this part of the Works. Such part shall not be considered to be completed for the purpose of taking-over under GCC.35 until these documents and manuals have been submitted to the Project Manager.

GCC.11. Time for Commencement and Completion

GCC.11.1. The execution of the Works shall commence from the fifteenth (15th) day after the date on which the Project Manager issues written orders to commence the Works, unless otherwise stated elsewhere in the Contract.

GCC.11.2. Before the actual commencement of Works, the Contractor shall submit an execution schedule of work clearly showing the materials, men and equipment to be mobilized by him to execute the Works. The schedule should contain the planned monthly progress of the Works for the approval of the Project Manager who will have the authority to make additions, alternations and substitutions to such schedule in consultation with the Contractor.

GCC.11.3. The entire scope of Works or any part of the Works (where such part is envisaged to be taken-over separately) covered under this Contract shall be completed within the time stated in the SCC or within such extended time granted to the Contractor by DGPC under GCC.45. The time allowed for execution of the Works as specified in the SCC or the extended time in accordance with these conditions shall be the essence of the Contract.

C. PAYMENT

GCC.12. Contract Price

GCC.12.1. Subject to GCC.38, the Contractor shall be deemed to:

a) have satisfied himself as to the correctness and sufficiency of the Contract Price, and

b) have based the Contract Price on the data, interpretations, necessary information, inspections, examinations and satisfaction as to all matters relevant to the Site.

GCC.12.2. Unless otherwise stated in the Contract, the Contract Price covers all the Contractor's obligations under the Contract and all things necessary for the proper execution and completion of the Works and the remedying of any defects in such Works.



GCC.12.3. The Contract Price and the currencies of the Contract Price shall be as specified in the Contract Agreement.

GCC.12.4. The Contract Price shall be adjusted in accordance with provisions of GCC.15.

GCC.13. Advance Payment

GCC.13.1. Mobilization advance

GCC.13.1.1. A lump sum mobilisation advance not exceeding ten percent (10%) of the Contract Price) as awarded shall be paid to the Contractor subject to the following conditions:

a) On unconditional acceptance of Letter of Award by the Contractor and signing of the Contract Agreement by both the Parties;

b) Acceptance and finalisation of detailed program for the execution of the Works (any software acceptable to the Project Manager) and finalisation of equipment mobilization schedule;

c) Submission of an irrevocable bank guarantee for the amount of advance in the proforma of bank guarantee provided in Form 21 of Section VIIB;

d) Finalisation of Quality Assurance Programme;

e) Submission of an irrevocable bank guarantee for the amount of Contract Performance Security in the proforma of bank guarantee provided in Form 20 of Section VIIB;

f) On certification of the Engineer In Charge that the Contractor has opened his office at Site and mobilised the plant and equipment specifically identified in Letter of Award for releasing this advance;

g) The advance payment shall be released only after the verification and confirmation of the above bank guarantees from the issuing bank.

The bank guarantee shall be in favour of DGPC, issued by a Financial Institution or any other Bank acceptable to DGPC

GCC.13.2. Secured Advance

GCC.13.2.1. An amount not exceeding seventy-five percent (75%) of the purchase price of the new plant and equipment specifically acquired for the Works and brought to Site against production of original invoices/bills in support thereof and subject to the condition that such plant and equipment are necessary for the Works and not in excess of requirements and are hypothecated in favour of DGPC as per Form 22A of Section VIIB for passing on the lien on the rights of the plant and equipment to DGPC, or, in lieu of deed, irrevocable bank guarantee for the amount of advance submitted to DGPC initially valid for twelve (12) months.

GCC.13.2.2. An amount not exceeding seventy-five percent (75%) of the purchase price of the construction materials as specified in SCC brought to the Site, against next six (6) months requirements, by the Contractor for incorporating in the Works as per the Contract Agreement and verified by the Project Manager and recorded in the measurement book shall be payable on the fulfilment of the following conditions:

a) The materials shall be new and in accordance with the specifications;

b) The materials shall be delivered at the Site of the Works, properly stored and protected against loss, damage or deterioration by the Contractor by taking suitable insurance cover for the full cost of such materials, if not covered in the insurance taken under GCC.40;



c) Upon certification of materials delivered at Site by the Project Manager and execution of a deed of hypothecation as per Form 22B of Sction VIIB for passing on the lien on the rights of the materials to DGPC, or, in lieu of deed, irrevocable bank guarantee for the amount of advance submitted to DGPC initially valid for twelve (12) months;

d) The amount of the secured advance shall be supported by the original invoices/bills. All materials imported from other countries shall be supported by Bhutan Sales Tax receipts or customs clearance.

GCC.13.3. Any of the above advances may be claimed by the Contractor at his option in instalments.

GCC.13.4. The above advances shall be utilised by the Contractor for the purposes of this Contract only and for no other purpose.

GCC.13.5. Advance recovery

GCC.13.5.1. The recovery of the advances given against plant and equipment under GCC.13.2.1 above shall be made by deduction from on account payments referred to in GCC.14 in suitable percentages fixed by the Project Manager in relation to the total cumulative advances released and the progress of the Works, so that all the sums advanced shall be fully recovered starting from the achievement of the progress of Works equal to ten percent (10%) and ending by the time eighty percent (80%) of the Works, as awarded, is complete.

GCC.13.5.2. The recovery of the advances given against materials under GCC.13.2.2 above shall be made by deduction from on account payments referred to in GCC.14 corresponding to the materials incorporated in the items of Works executed during the period for which the progressive payment is being made. It is to be ensured that all the sums advanced shall be fully recovered by the time eighty percent (80%) of the Works, as awarded, is complete.

GCC.13.5.3. If the amount payable under any interim bill is not sufficient to cover all deductions to be made for sums advanced under GCC.13.2.1 and GCC.13.2.2 and other sums deductible therefrom, the balance outstanding shall be deducted from subsequent interim bill/bills, as may be necessary, failing that, as otherwise provided for in the Contract.

GCC.13.6. If for any reason, except for reasons of default of the Contractor, the Works under the Contract is suspended continuously for more than thirty (30) days, the Contractor shall be at liberty to remove the plant and equipment or any part thereof hypothecated to DGPC under GCC.13.2 above, to any other work site of the Contractor for carrying on his other works, on his furnishing prior to such removal, a bank guarantee acceptable to DGPC for the amount of the outstanding advance granted under GCC.13.2 above if no such bank guarantee has been given earlier and upon the Contractor undertaking to bring back to the Site, before expiry of the period of suspension, such plant and equipment as may be necessary for completion of the Works. If any such plant and equipment are not brought back, DGPC shall recover the advance outstanding against such plant and equipment by way of deductions from any payments due to the Contractor under the Contract or by encashment of the aforesaid bank guarantee.

GCC.13.7. The value of the bank guarantees towards the above advances shall be reduced every six (6) months after the date of commencement of recovery of corresponding advance under the Contract in accordance with GCC.13.5, pro-rata to amount of advance recovered. The quantum of reduction of the value of bank guarantee at any point of time shall be restricted to seventy-five percent (75%) of the value of advance adjusted and recovered, as certified by the Project Manager. It should be clearly understood that reduction in the value of bank guarantee towards advance shall not in any way dilute the Contractor's responsibility and liabilities under the Contract including in respect of the Works for which the reduction in the value of bank guarantee is allowed.

Projects & Contract Department
DGPC
BHUTAN
Contracts Section

GCC.14. Progressive Payments

GCC.14.1. The Contractor shall prepare and submit monthly running bills for the Works executed during the preceding month, by the date stipulated by the Project Manager, in the prescribed proforma, supported with measurements, jointly acknowledged and accepted in the measurement books. Payments of the Contractor's bill shall be made by DGPC within thirty (30) days from the date of submission of bill after due verification and authorisation by the Project Manager that the Works have been performed in accordance with the Technical Specifications; and subject to the bills being compliant with all the requirements of the Contract.

GCC.14.2. The amount certified by the Project Manager for payment to the Contractor shall account for all deductions, including statutory deductions as for income tax, etc., recoveries for advances and any other amounts due from the Contractor for the services provided by DGPC. Such payments made by DGPC shall not constitute any acceptance of the measurements of items of the Works by DGPC and the Project Manager shall have the right to alter, modify, reduce or diminish the quantities or classification entered in the measurement books or bills. DGPC shall have right to recover any amount paid in an earlier bill from any subsequent bill and should the amount to be recovered be more than the amount of the subsequent bill, the Contractor shall on demand from the Project Manager or DGPC immediately refund the extra amount to DGPC within seven (7) days. No payment made by DGPC herein shall be deemed to constitute acceptance by DGPC of the Works or any part(s) thereof.

GCC.14.3. The release of first progressive interim payment shall be subject to submission of documentary evidence by the Contractor towards having taken the insurance policy (ies) in terms of relevant provisions of GCC.40 and acceptance of the same by the Project Manager.

GCC.14.4. The Contractor shall maintain a separate account with a scheduled bank at Site, or at any nearby place, for the purpose of receiving all the payments under the Contract and for utilisation of payments received from DGPC for disbursement to Subcontractors, sub-vendors, etc., of the Contractor. The Contractor shall maintain separate books of accounts for all payments under this Contract and the Project Manager shall have access to these at all times.

GCC.14.5. Any interim certificate given relating to work done, may be modified or corrected by any subsequent interim certificate or by the final certificate. No certificate of the Project Manager supporting an interim payment shall itself be conclusive evidence that any Works to which it relates is/are in accordance with the Contract.

GCC.14.6. In case of delayed Works beyond the scheduled completion period, pending consideration of extension of Time of Completion if it had been requested by the Contractor, interim payments shall continue to be made as herein above provided.

GCC.14.7. The final bill shall be submitted by the Contractor within three (3) months of Taking-Over of the Works unless otherwise a longer period is agreed to between the Project Manager and the Contractor. Upon submission of the final bill, the Contractor shall give to the Project Manager, a written discharge confirming that the total of the final bill represents full and final settlement of all payments due to the Contractor arising out of or in respect of the Contract. No further claims shall be made by the Contractor after submission of the final bill and these shall be deemed to have been waived and extinguished. Payment of the final bill will be made within three (3) months of receipt of the same after due verification and adjustments, if any, provided, the final bill is in compliance with the requirements of the Contract any other requirement specified by the Project Manager during the course of verification of such final bill.

Projects & Contract Department DGPC BHUTAN Contracts Section

GCC.14.8. The currency or currencies in which payments are to be made to the Contractor under this Contract shall be specified in the Contract Agreement, subject to the general principle that payments will be made in the currency or currencies in which the Contract Price has been stated in the Contractor's Bid. In cases where the Bid price is in Indian Rupees (INR) or Bhutanese Ngultrum (BTN), DGPC shall at its discretion make payment in either of the currencies at the exchange rate of one BTN = one INR.

GCC.14.9. All payments in foreign currency as specified in BDS, shall be arranged by transfer of funds in the overseas bank account of the Contractor in case of a foreign Contractor. All payments in Ngultrum shall be paid to the Contractor through account payee cheque or through electronic mode in their account in Bhutan. Date of issue of account payee cheque or date of transfer of funds to Contractor's account shall be considered as date of release of payment to the Contractor.

GCC.15. Contract Price Adjustment

GCC.15.1. The regulation and payment of Contract Price Adjustment under the Contract shall be governed by the provisions herein under if the prices are permitted to be quoted with price adjustment formula:

GCC.15.2. The Contract Price as awarded shall be the base Contract Price.

GCC.15.3. A certain fixed percentage of the base Contract Price shall not be subject to any Contract Price Adjustment. The balance percentage to be specified shall be of identified components towards labour, material(s) and H.S. diesel oil, hereinafter called the variable component, shall be subject to Contract Price Adjustment.

GCC.15.4. The fixed component and the variable components shall be specified in SCC.

GCC.15.5. The amount of Contract Price Adjustment payable/ recoverable for the work done during the relevant period shall be calculated as under:

CPA = ACP - BCP

Where,

CPA = Control Price Agreement

BCP = Base Contract Price

ACP = Adjusted Contract Price

ACP shall be computed as under:

$$ACP = BCP * \left[F + \frac{l * L_1}{L_0} + \frac{m * M_1}{M_0} + \frac{m * M_2}{M_0}\right]$$

F+l+m = 1

Where:

F = Fixed component expressed in percentage of the Base Contract Price which will not be subject to any adjustment as quantified and stipulated in the SCC, generally 20%.

l = Labour component expressed in percentage of the Base Contract Price which will be subject to Price Adjustment as quantified and stipulated in the SCC, generally upto 15% to 30%

m = Material component expressed in percentage (excluding material issued by DGPC) of the Base Contract Price which

Projects & Contract Department DGPC BHUTAN Contracts Section

will be subject to Price Adjustment as quantified and stipulated in the SCC, generally 30% to 60%

L = Labour Index as stipulated in SCC

M = Material Index as stipulated in SCC

SUBSCRIPT

'0' = refers to the value of the above-mentioned labour/ material indices as on thirty (30) days prior to the Bid opening date.

'1' = refers to the value of the corresponding labour / material indices as applicable for the preceding month in which the work is executed for which the adjustment is applicable, respectively.

GCC.15.6. The total amount payable on the Base Contract Price on account of the Contract Price Adjustment as indicated in GCC.15.5 above shall not exceed the maximum of twenty percent (20%) of the Contract Price as awarded.

GCC.15.7. Contract Price Adjustment(s) shall be calculated for the value of Works executed for the billing month as per agreed work schedule. For the purpose of payment/recovery of Price Adjustments, such payment/refund shall be operative and payable in accordance with the schedule completion period (including authorised extensions, if any) or actual completion period, whichever is earlier. Provided further that the Contractor would be eligible for such price adjustment claims or shall be liable for refund on the quantum of Works scheduled or the actual quantum of Works done provided always that the work done is more than or equal to the scheduled of work as per agreed work schedule.

GCC.15.8. The Contractor shall not be eligible for the payment of the price adjustment claims or liable for refund of Contract Price adjustment for the period beyond the schedule date of execution of Works if the Works has been delayed beyond the scheduled date(s) for reasons attributable to the Contractor. However, for quantities of Works executed beyond the scheduled dates of execution, the Contractor would be liable for refund of Contract Price Adjustment(s) for such delayed Work based on the value of the indices as applicable to the scheduled dates of execution, provided that if the indices of the actual dates of execution are lower than the indices as on scheduled dates of execution, then lower indices shall be applicable. In cases where the execution of Works is delayed for reasons attributable to DGPC, the Contractor shall be eligible for payment or refund of price adjustment on such delayed execution of Works based on the indices prevailing as on the date of execution of such Works.

GCC.15.9. Rates of items included in the Bill of Quantities, whose quantities have varied beyond the permissible deviation limits and rates of extra items, derived and agreed from items included in the Bill of Quantities will also be subject to price adjustment as per this clause.

GCC.15.10. The Contractor shall, every month after commencement of the Works, submit to the Project Manager a written notice of the changes, if any, that have occurred in the specified indices of Materials, and Labour or that of Diesel price, etc, during the previous reporting period containing the effective date of such change, with authenticated documentary evidence of the relevant applicable published indices / diesel price, etc.

GCC.15.11. Monthly bills for Contract Price Adjustment will be made by the Contractor commencing first, from the month when all the relevant/ applicable indices/ diesel prices are available and not later than fifteen (15th) day of every month thereafter. The period for processing and making payment for these bills will also be governed by the provisions as applicable to on-account/ progressive interim payments.

GCC.15.12. For this purpose, the work schedule shall be as identified in line with provisions of GCC.11.

Projects & Contract Department DGPC BHUTAN Contracts Section

GCC.16. Overpayments and Underpayments

GCC.16.1. Wherever any claim for the payment of a sum of money to DGPC arises out of or under this Contract against the Contractor, the Contractor upon demand by DGPC, with explanation of the reasons for such a sum becoming due, shall forthwith pay the same to DGPC. If the Contractor fails to do so within twenty-one (21) days of such a demand made on the Contractor, then the same may be deducted by DGPC from any sum then due or which at any time thereafter may become due to the Contractor under this Contract or from any other sum due to the Contractor from DGPC under any other contract which may be available with DGPC or by encashment of his contract performance security.

GCC.16.2. DGPC reserves the right to carry out post payment audit and technical examination of the final bill including all supporting vouchers, abstracts, etc. DGPC further reserves the right to enforce and recover any overpayment when detected, notwithstanding the fact that the amount of the final bill may include any item which is under dispute between the Parties and referred to for settlement under GCC.9 and notwithstanding the fact that the amount of the final bill figures in the arbitration decision/award.

GCC.16.3. If as a result of such audit and technical examination, any overpayment is discovered in respect of any Works done by the Contractor or alleged to have been done by him under the Contract, it shall be recovered by DGPC from the Contractor by any or all of the methods prescribed above. Similarly, if any underpayment is discovered by DGPC, the amount shall be duly paid to the Contractor by DGPC forthwith.

GCC.16.4. Any amount due to the Contractor under this Contract for underpayment may also be adjusted against any amount then due or which may at any time thereafter become due from DGPC to the Contractor under any other Contract or account whatsoever.

GCC.17. Taxes and Duties

GCC.17.1. Except as otherwise specifically provided in the Contract, the Contractor shall bear and pay all taxes, duties, levies and charges assessed on the Contractor, its Subcontractors by laws, regulations of the Kingdom of Bhutan in connection with the Works in and outside of the Kingdom of Bhutan. The Contract Price shall be deemed to be inclusive of all such taxes, duties, levies, royalties, etc. on the materials incorporated into the Works.

GCC.17.2. Bidders participating from India, for supply and bonafide use in the Kingdom of Bhutan shall quote the rates and prices for the items in the Bill of Quantities exclusive of any effect of the Integrated Goods and Service Tax (IGST). The IGST on the export of goods or services or both are covered under Zero Rated Supply as per Chapter VII, 16(1) THE INTEGRATED GOODS AND SERVICES TAX ACT, 2018 of India.

GCC.17.3. Unless otherwise stated in the Technical Specifications, the Contractor shall pay all royalties, rents and other payments for:

a) natural materials obtained from inside and outside the Site, and

b) the disposal of materials from demolitions and excavations and of other surplus material (whether natural or man-made), except to the extent that disposal areas within the Site are specified in the Contract.

GCC.17.3.1. Except where otherwise stated, the Contractor shall pay royalties, rent and other payments or other compensations, if any, for getting stone, sand, gravel, clay or other materials required for the Works.

GCC.17.3.2. Mining permission, wherever required, shall be obtained by the Contractor from the relevant statutory authorities. DGPC will issue a recommendation letter for obtaining mining permission. Further, the Contractor shall be responsible for finalising and submitting the necessary plans and documents as per the requirements of these authorities. The Contractor shall ensure that the mining/quarrying practices employed are in

Projects & Contract Department DGPC BHUTAN Contracts Section

compliance with the guidelines/directives of the concerned authorities. The Contractor shall obtain the Project Manager's approval for the excavation plans of borrow areas.

GCC.17.3.3. It shall be the responsibility of the Contractor to ensure that the materials quarried are used only for the works within the scope of this Contract and that there is no pilferage of these materials. In the event that the Project Manager discovers pilferage of quarried materials, he shall be within his right to make his own assessment of loss of materials and recover from the Contractor the cost of the same at the prevalent market rates of such materials.

GCC.17.3.4. The royalty charges, where payable on the materials quarried, shall be paid directly to the concerned authorities by the Contractor and he shall provide the documentary evidence/certification from the concerned authorities along with the running bills in support of such payments. The Contractor shall be responsible for the reconciliation of the quantities of materials on which royalty is payable and settlement of the total amount of royalty charges to be paid, with the concerned authorities and any payment due to be paid to them arising out of such reconciliation and settlement shall also be paid by him. In the event that the Contractor fails to pay the balance amount or reconcile and settle the total amount of royalty and any claims are raised by the concerned authorities on the above accounts, the same shall be paid by DGPC and recovered from the Contractor.

GCC.17.4. At the time of release of payment, tax shall be deducted at source (TDS) from Bhutanese Bidders and International Bidders as specified in the SCC from the gross amount of bills. DGPC shall furnish necessary TDS Certificate to the Contractor, issued by the Department of Revenue & Customs, RGoB. The Contractor shall be responsible to deduct tax at source from the gross payments made to its Subcontractors and deposit the same to the account of RGoB as per provisions of relevant law in this regard in force from time to time.

GCC.17.5. Any tax that may be levied in the Kingdom Bhutan on the profits made by the Contractor in respect of the Contract shall be to the Contractor's account and no separate claim in this regard will be entertained by DGPC.

GCC.17.6. If any tax exemptions, reductions, allowances or privileges are available to the Contractor in the Kingdom of Bhutan, DGPC shall use its best endeavours to enable the Contractor to benefit from any such tax savings to the maximum allowable extent.

GCC.17.7. For the purpose of the Contract, it is agreed that the Contract Price specified in the Contract Agreement is inclusive of the taxes, duties, levies and charges prevailing at the date thirty (30) days prior to the last date of Bid submission in the Kingdom of Bhutan (hereinafter called "Tax" in this clause). If any rates of Tax are increased or decreased, a new Tax is introduced, an existing Tax is abolished, or any change in interpretation or application of any Tax occurs in the course of the performance of Contract, which was or will be assessed on the Contractor in connection with performance of the Contract, an equitable adjustment of the Contract Price shall be made to fully take into account any such change by addition to the Contract Price or deduction therefrom, as the case may be, in accordance with GCC.42 hereof.

GCC.17.8. The Contractor's staff, personnel and labour will be liable to pay personal income tax in Bhutan in respect of such of their salaries and wages as are chargeable under the laws and regulations for the time being in force and the Contractor shall perform such duties in regard to such deductions thereof as may be imposed on him by such laws and regulations.

GCC.17.9. The Contractor and all its expatriate personnel shall be responsible for the timely and prompt filing of all returns, documents, estimates, accounts, information and details complete and accurate in all respects as may be required under the applicable laws and regulations to the appropriate authorities in Bhutan. In case the Contractor or any of its

Projects & Contract Department DGPC BHUTAN Contracts Section

expatriate personnel do not comply with the above requirements, which results in any penalty, interest or other liability, the same shall be borne by the Contractor.

GCC.18. Contract Performance Security

GCC.18.1. The Contractor shall, within thirty (30) days of the Letter of Award, provide to DGPC at his own cost, security for due performance of the Contract equivalent to ten percent (10%) of the Contract Price, with initial validity upto thirty (30) days beyond the scheduled Defect Liability Period of the last Works covered under the Contract. However, in case of delay in completion of the contract and consequently extension of the Defect Liability Period, the validity of the contract performance security shall be extended by the Contractor for such period of delay.

GCC.18.2. The contract performance security shall be denominated in the currency or currencies of the Contract and shall be in the form of irrevocable bank guarantee provided in Form 20 of Section VIIB. The Performance Security can also be submitted in the form of demand draft if so, specified in SCC. The bank guarantee/ demand draft shall be in favour of DGPC, issued by Financial Institution of Bhutan or any other foreign bank acceptable to DGPC.

GCC.18.3. If the contractor fails to remedy any reported defect within the Defect Liability Period, the DGPC shall be entitled to remedy the defect at the expense of the Contractor and appropriate the cost of such remedying defects out of the Contract Performance Security.

GCC.18.4. The performance security will be discharged and returned to the Contractor with in thirty (30) days after the expiry of the last Defect Liability Period.

GCC.18.5. If at the time of discharge of Performance Security, the Defects Liability Period has been extended for any part of the Works pursuant to GCC.37.4 hereof, the Contractor shall issue a separate performance security in the form of an irrevocable bank guarantee for an amount proportionate to the Contract Price of that part of the Works valid for a period of at least eighteen (18) months from the time such replacement/repair of the Works or any part thereof, has been completed. No interest shall be paid to the Contractor against the contract Performance Guarantee furnished under the provisions of this clause.

GCC.18.6. DGPC shall have the right to forfeit the contract performance security along with differential security, if any, in the following circumstances:

a) Failure by the Contractor to extend the validity of the contract performance security as per GCC.18.1, or

b) Failure by the Contractor to pay DGPC any amount due under the Contract, within twenty-one (21) days after its notice of payment has been given by DGPC as per GCC.16, or

c) Failure by the Contractor to remedy any defect in the Works within forty-two (42) days after receiving DGPC's notice requiring the defect to be remedied, or

d) Circumstances which entitle DGPC to terminate the Contract, or

e) Failure to pay the liquidated damages under GCC.36.

GCC.19. Retention Money

GCC.19.1. If the Executed Contract value exceeds Contract Value, then Retention Money of 10% of the exceeded amount in addition to the Performance security already submitted shall be deducted from the running bills and retained till the end of the Defect Liability Period.

GCC.19.2. The Retention Money or part thereof may be returned to the contractor on completion of the Defect Liability Period. After completion of the work, the retention money may be returned

Projects & Contract Department DGPC BHUTAN Contracts Section

to the contractor against his submission of a bank guarantee, acceptable to the Procuring agency. Such bank guarantee shall be valid until the issue of a No Defect Liability Certificate.

GCC.19.3. If the contractor fails to remedy any reported defect within the Defects Liability Period, the DGPC shall withhold the payment or realize claims from the Retention Money, of an amount, which in the opinion of the DGPC, represent the cost of the defects to be remedied.

On completion of the Defects Liability Period, the Engineer In-charge shall issue a no Defect Liability Certificate to the contractor and release the retention money and/ or bank guarantee as available within fifteen (15) days from the issue of certificate.

D. INTELLECTUAL PROPERTY

GCC.20. Copyright

GCC.20.1. The copyright in all drawings, documents and other materials containing data and information furnished to DGPC by the Contractor shall remain vested in the Contractor, or, if they are furnished to DGPC directly or through the Contractor by any third party, including suppliers of materials, the copyright in such materials shall remain vested in such third Party.

GCC.21. Confidential Information

GCC.21.1. DGPC and the Contractor shall keep confidential and shall not, without the written consent of the other Party hereto, divulge to any third party any documents, data or other information furnished directly or indirectly by the other Party hereto in connection with the Contract, whether such information has been furnished prior to, during or following completion or termination of the Contract. Notwithstanding the above, the Contractor may furnish to its Subcontractors such documents, data and other information as it receives from DGPC to the extent required for the Subcontractor to perform its obligations under the Contract, in which event the Contractor shall be under obligation to have a clause in the contracts with their Subcontractor regarding confidentiality similar to that provided herein.

GCC.21.2. DGPC shall not use such documents, data and other information received from the Contractor for any purposes unrelated to the Contract. Similarly, the Contractor shall not use such documents, data and other information received from DGPC for any purpose other than the design, procurement of plant and equipment, construction or such other work and services as are required for the performance of the Contract.

GCC.21.3. The obligation of a Party under GCC.21.1 and GCC.21.2 above, however, shall not apply to information that:

a. DGPC or Contractor needs to share with the RGoB;

b. now or hereafter enters the public domain through no fault of that Party;

c. can be proven to have been possessed by that Party at the time of disclosure and which was not previously obtained, directly or indirectly, from the other Party; or

d. otherwise lawfully becomes available to that Party from a third party that has no obligation of confidentiality.

GCC.21.4. The above provisions of GCC.21 shall not in any way modify any undertaking of confidentiality given by either of the Parties hereto prior to the date of the Contract in respect of the performance of the Contract or any part thereof.

GCC.21.5. The provisions of GCC.21 shall survive completion or termination, for whatever reason, of the Contract.

Projects & Contract Department DGPC BHUTAN Contracts Section

GCC.22. Indemnity

GCC.22.1. The Contractor shall, subject to DGPC's compliance with GCC.22.2, indemnify and hold harmless DGPC and its employees and officers from and against any and all suits, actions or administrative proceedings, claims, demands, losses, damages, costs and expenses of any nature, including attorney's fees and expenses, which DGPC may suffer as a result of any infringement or alleged infringement of any patent, utility model, registered design, trademark, copyright or other intellectual property right registered or otherwise existing at the date of the Contract by reason of:

a. the execution of the Works by the Contractor or the use of the Works in the Kingdom of Bhutan; and

b. the sale in any country of the products produced by the Works.

GCC.22.2. The Contractor shall indemnify and hold harmless DGPC and its employees and officers from and against any and all suits, actions or administrative proceedings, claims, demands, losses, damages, costs, and expenses of whatsoever nature, including attorney's fees and expenses, in respect of the death or injury of any person or loss of or damage to any property (other than the Works whether accepted or not), arising in connection with the supply and erection of Works and by reason of the negligence of the Contractor or its Subcontractors, or their employees, officers or agents. For any injury, death or property damage caused by the negligence of DGPC, its contractors, employees, officers or agents DGPC shall be responsible.

GCC.22.3. Such indemnity shall not cover any use of the Works or any part thereof other than for the purpose indicated by or reasonably to be inferred from the Contract, neither any infringement resulting from the use of the Works or any part thereof, or any products produced thereby in association or combination with any other equipment, plant or materials not supplied by the Contractor, pursuant to the Contract.

GCC.22.4. If any proceedings are brought or any claim is made against DGPC or its representatives or its employees arising out of the matters referred to in GCC.22.1 and GCC.22.2, DGPC shall promptly give the Contractor notice thereof, and the Contractor may at its own expense and in DGPC's name conduct such proceedings or claims and any negotiations for the settlement of any such proceedings or claims.

GCC.22.5. If the Contractor fails to notify DGPC within thirty (30) days after receipt of such notice that it intends to conduct any such proceedings or claims, then DGPC shall be free to conduct the same on its own behalf at the cost of the Contractor. Unless the Contractor has so failed to notify DGPC within the thirty (30) day period, DGPC shall make no admission that may be prejudicial to the defence of any such proceedings or claim.

GCC.22.6. DGPC shall, at the Contractor's request, provide all available assistance to the Contractor in conducting such proceedings or claim, and shall be reimbursed by the Contractor for all reasonable expenses incurred in so doing.

GCC.22.7. DGPC shall indemnify and hold harmless the Contractor and its employees, officers from and against any and all suits, actions or administrative proceedings, claims, demands, losses, damages, costs and expenses of any nature, including attorney's fees and expenses, which the Contractor may suffer as a result of any infringement or alleged infringement of any patent, utility model, registered design, trademark, copyright or other intellectual property right registered or otherwise existing at the date of the Contract arising out of or in connection with any design, data, drawing, specification or other documents or materials provided or designed by or on behalf of DGPC.

GCC.22.8. DGPC shall indemnify and hold harmless the Contractor and its employees, officers and Subcontractors from any liability for loss of or damage to property of DGPC, other than the Works not yet taken over, that is caused by fire, explosion or any other perils, in excess

Projects & Contract Department DGPC BHUTAN Contracts Section

of the amount recoverable from insurances procured under GCC.40, provided that such fire, explosion or other perils were not caused by any act or failure of the Contractor.

GCC.22.9. The Party entitled to the benefit of an indemnity under this clause shall take all reasonable measures to mitigate any loss or damage which has occurred. If the Party fails to take such measures, the other party's liabilities shall be correspondingly reduced.

E. WORK EXECUTION

GCC.23. Representatives

GCC.23.1. Project Manager

GCC.23.1.1. If the Project Manager is not named in the SCC, then within fifteen (15) days of the Effective Date, DGPC shall appoint and notify the Contractor in writing of the name of the Project Manager. DGPC may from time to time appoint some other person as the Project Manager in place of the person previously so appointed and shall give a notice of the name of such other person to the Contractor without delay. DGPC shall take reasonable care to see that no such appointment is made at such a time or in such a manner as to impede the progress of Works. The Project Manager shall represent and act for DGPC at all times during the currency of the Contract and carry out duties and responsibilities specified in the Contract. However, the Project Manager shall have no authority to amend the Contract.

GCC.23.1.2. The Project Manager may exercise the authority attributable to him as specified to him or necessarily to be implied from the Contract. If the Project Manager is required to obtain the approval of DGPC before exercising a specific authority, he shall be responsible for taking such approval. DGPC undertakes not to impose further constraints on the Project Manager's authority except as provided in the Contract. However, whenever the Project Manager exercises a specific authority for which DGPC's approval is required, then (for the purpose of the Contract) DGPC shall be deemed to have given approval.

GCC.23.1.3. All notices, instructions, orders, certificates, approvals and all other communications under the Contract shall be given by the Project Manager, except as herein otherwise provided.

GCC.23.1.4. The Project Manager's representative will be appointed by and be responsible to the Project Manager and will carry out such duties and exercise such authority as may be delegated to him by the Project Manager under GCC.23.1.5. Project Manager's representativeshall have no authority to relieve the Contractor of any of his duties or obligations under the Contract except as expressly provided hereunder or elsewhere in the Contract, nor to order any work involving delay or any extra payment by DGPC, nor to make any changein the Works.

GCC.23.1.5. The Project Manager may, from time to time delegate to the Project Manager's representative any of the powers and authorities vested in the Project Manager and he may at any time revoke such delegation and furnish to the Contractor a copy of all such written delegation of power and authorities including any revocation thereof. Any communication issued by the Project Manager's representative to the Contractor in accordance with such delegation shall have the same effect as though it had been issued by the Project Manager. Provided that:

i. any failure of the Project Manager's representative to disapprove any work or materials shall not prejudice the authority of the Project Manager thereafter to disapprove such work or materials and to give instructions for the removal or for the rectification thereof.

Projects & Contract Department DGPC BHUTAN Contracts Section

ii. If the Contractor questions any communication of the Project Manager's representative, he may refer the matter to the Project Manager who will confirm, reverse or vary the contents of such communication.

GCC.23.1.6. The Project Manager or the Project Manager's representative may appoint any number of persons to assist the Project Manager's representative in carrying out of his duties. Such assistants shall have no authority to issue any instructions to the Contractor save in so far as such instructions may be necessary to enable them to carry out their duties and to secure their acceptance of materials, plant, equipment and machinery or workmanship as being in accordance with the Contract, and any instructions given by any of them for those purposes shall be deemed to have been given by the Project Manager's representative.

GCC.23.2. Contractor's Representative

GCC.23.2.1. The Contractor shall employ the key personnel named in the Schedule of Key Personnel, as referred to in the SCC, to carry out the functions stated in the Schedule or other personnel approved by the Project Manager. The Project Manager shall approve any proposed replacement of key personnel only if their relevant qualifications and abilities are substantially equal to or better than those of the personnel listed in the Schedule. If the Contractor fails to deploy the personnel as committed in the Bid document, the employer shall stop the work if the quality of work is going to suffer or otherwise deduct the salaries of such personnel at a rate stipulated in the SCC per month per personnel for every month of absence of such personnel from the site. Such deductions shall continue till such time that the Contractor deploys the key personnel acceptable to the employer. If the Contractor fails to deploy such key personnel within one to four months, the deductions shall be discontinued and the contractor's failure to deploy such personnel shall be treated as a fundamental breach of contract.

GCC.23.2.2. If the Contractor's Representative is not named in the Contract, then within fifteen (15) days of the Effective Date, the Contractor shall appoint the Contractor's Representative and shall request DGPC in writing to approve the person so appointed. If DGPC makes no objection to the appointment within fifteen (15) days, the Contractor's Representative shall be deemed to have been approved. If DGPC objects to the appointment within fifteen (15) days giving the reason thereof, then the Contractor shall appoint a replacement within fifteen (15) days of such objection, and the foregoing provisions of this clause GCC.23.2.1 shall apply thereto.

GCC.23.2.3. The Contractor's Representative shall represent and act for the Contractor at all times during the currency of the Contract and shall give to the Project Manager all the Contractor's notices, instructions, information and all other communications under the Contract.

All notices, instructions, information and all other communications given by DGPC or the Project Manager to the Contractor under the Contract shall be given to the Contractor's Representative or, in its absence, its deputy, except as herein otherwise provided.

The Contractor shall not revoke the appointment of the Contractor's Representative without DGPC's prior written consent, which shall not be unreasonably withheld. If DGPC consents thereto, the Contractor shall appoint some other person as the Contractor's Representative, pursuant to the procedure set out in GCC.23.2.1.

GCC.23.2.4. The Contractor's Representative may, subject to the approval of DGPC (which shall not be unreasonably withheld), at any time delegate to any person any of the powers, functions and authorities vested in him or her. Any such delegation may also be revoked at any time subject to the approval of DGPC. Any such delegation or revocation shall be subject to a prior notice signed by the Contractor's Representative, and shall specify the powers, functions and authorities thereby delegated or revoked. No such delegation or revocation

Projects & Contract Department DGPC BHUTAN Contracts Section

shall take effect unless and until a copy thereof has been delivered to DGPC and the Project Manager.

Any act or exercise by any person of powers, functions and authorities so delegated to him or her in accordance with this clause GCC.23.2.4 shall be deemed to be an act or exercise by the Contractor's Representative.

GCC.24. Work Program

GCC.24.1. Manner of execution

The Contractor shall carry out the execution of the Works:

a. in the manner (if any) specified in the Contract;

b. in a proper workmanlike and careful manner, in accordance with recognized good practice; and

c. with properly equipped facilities and non-hazardous materials, except as otherwise specified in the Contract.

GCC.24.2. Program of execution of Works

Within thirty (30) days of the Effective Date, the Contractor shall prepare and submit in soft copies to the Project Manager for his approval a detailed construction schedule showing the sequence and interdependence of activities and work breakdown structure covering all the activities to meet milestone schedules for complete performance of work, starting from the commencement date to completion within the Time for Completion.

The detailed construction schedule shall include time scaled network diagrams and Gantt charts, based on calendar days. It shall be constructed to show the order in which the Contractor proposes to carry out the work and availability/requirement and use of manpower, materials and construction equipment. The Contractor shall utilize the detailed construction schedule in planning, scheduling, monitoring, coordinating and performing the Works under the Contract (including activities of Subcontractors, plant vendors, material suppliers, etc.). The program so submitted by the Contractor shall be in accordance with the Contract.

The Project Manager and Contractor shall meet within seven (7) days of submittal of the detailed construction schedule to review and make any necessary adjustments or revisions. The Contractor shall submit the revised schedule within seven (7) days of re-submission. The process of finalizing the detailed construction schedule shall be completed within sixty (60) days from the date of issue of Letter of Award. The detailed construction schedule, once approved by DGPC, shall become the baseline record schedule. The baseline detailed construction schedule shall be used for all monitoring and evaluation of Contractor's performance.

The Contractor shall update and revise the schedule as and when appropriate or when required by the Project Manager, but without modification in the Time for Completion and any extension granted in accordance with GCC.45, and shall submit all such revisions to the Project Manager for his approval.

If at any time the Contractor's actual progress falls behind the program, or it becomes apparent that it will so fall behind, the Contractor shall, at the request of DGPC or the Project Manager, prepare and submit to the Project Manager a revised program, taking into account the prevailing circumstances, and shall notify the Project Manager of the steps being taken to expedite progress so as to attain completion of the Works within the Time for Completion, any extension thereof entitled, or any extended period as may otherwise be agreed upon between DGPC and the Contractor.

GCC.24.3. Progress Report

Projects & Contract Department DGPC BHUTAN Contracts Section

The Contractor shall monitor progress of all the activities specified in the program referred to in GCC.24.2 above, and supply a progress report during the execution of the Contract to the Project Manager at his cost by fifteenth (15th) of every month in three (3) copies.

The progress report shall be in a form acceptable to the Project Manager and shall inter-alia include:

a. Detailed description of progress, including each stage of design, procurement, manufacture, delivery to Site, construction, erection, testing, etc.;

b. Charts showing the status of design and construction documents, purchase orders, manufacture and construction;

c. For the manufacture of each main item of plant and materials, name of manufacturer, factory location, percentage progress, actual date or expected date of Contractor's inspections, tests and delivery;

d. Records of Contractor's personnel and construction equipment on Site;

e. Copies of quality assurance documents, test results and acceptance certificates of plant and materials;

f. Safety statistics including details of any hazardous incidents and activities related to Site, environmental aspects and public relations;

g. Comparison of actual and planned progress, with details of any aspects which may delay or jeopardize the completion as per Contract, and the measures being (or to be) taken to overcome such aspects and difficulties;

h. Actions pending from DGPC which may delay the Works;

i. Details of construction drawings required for Works atleast two (2) months in advance of their requirement.

The progress report shall be supported by photographs and other written material as the Project Manager may direct. The Contractor shall have to attend all the meetings at his own cost with the Project Manager or any authorized representative of DGPC during the currency of the Contract, as and when required and fully cooperate with such persons and agencies involved during these discussions.

GCC.24.4. Progress review meetings

The Contractor shall attend all periodic progress review meetings organized by the Project Manager or his authorized representative. The deliberations in the meetings shall inter-alia include the scheduled program, progress of work achieved (including details of manpower, tools and plants deployed by the Contractor vis-a-vis agreed work schedule), inputs to be provided by DGPC, delays, if any and recovery programme, specific hindrances to the Works and work instructions by the Project Manager. The minutes of such meetings shall be prepared by the Project Manager. These minutes shall be jointly signed by the Project Manager or his authorized representative and the Contractor and one copy of the signed minutes shall be handed over to the Contractor.

GCC.25. Subcontracting

GCC.25.1. The Contractor may subcontract the Works/any part of the Works as specified in the SCC, with the prior written consent of the Project Manager. The qualifying requirements for the Subcontractors to perform the specified part of Works shall be specified in the SCC.

GCC.25.2. Where the Contractor is intending to subcontract any part of the Works, it shall propose a Subcontractor for any part of the Works out of the list furnished by the Contractor in his Bid. The Contractor along with his request for approval of Subcontractor shall also

Projects & Contract Department DGPC BHUTAN Contracts Section

submit the requisite credentials of the Subcontractor proposed to be engaged, matching with the qualifying requirements prescribed in the SCC. The details so furnished by the Contractor shall be reviewed by Project Manager. In case the Subcontractor proposed by the Contractor for the subcontracting is not considered acceptable, the Contractor will be required to furnish credentials of alternate Subcontractor for approval of the Project Manager. Based on the review and assessment, the Subcontractor shall be approved by the Project Manager within twenty-one (21) days of furnishing of credentials by the Contractor.

GCC.25.3. Any consent by the Project Manager for appointment of Subcontractor shall not relieve the Contractor from any liability or obligation under the Contract and he shall be responsible for the acts, defaults and neglects of any Subcontractor, his agents, servants or workmen as fully as if they were the acts, defaults or neglects of the Contractor, his agents, servants or workmen. Any work or part of the work other than those mentioned above shall not be subcontracted by the Contractor.

GCC.25.4. Notwithstanding the provisions of GCC.25.2, the Contractor shall not be required to obtain prior approval of Project Manager for appointment of Subcontractor for:

a) the provision of labour;

b) the purchase of materials which are in accordance with the standards specified in the Contract; or

c) the subcontracting of any part of the Works for which the Subcontractor is named in the Contract.

GCC.25.5. The Contractor shall not subcontract the whole of the Contract and shall also not subcontract any part of the scope of work which is specifically prohibited for subcontracting under the provisions of the Contract.

GCC.26. Construction and Erection

GCC.26.1. Setting Out/Supervision/Labour

GCC.26.1.1. **Bench Mark**: The Project Manager shall establish/indicate the benchmarks and convey the same in writing to the Contractor immediately after acceptance of Letter of Award. The Project Manager shall be responsible for correctness of such data/benchmarks conveyed to the Contractor.

GCC.26.1.2. The Contractor shall be responsible for the true and proper setting-out of all the Works in relation to bench marks, reference marks and lines provided to it in writing by the Project Manager.

If, at any time during the progress of Works, any error shall appear in the position, grades, dimensions, level or alignment of any part of the Works, the Contractor shall forthwith notify the Project Manager of such error and, at its own expense, immediately rectify such error to the reasonable satisfaction of the Project Manager. If such error is based on incorrect data provided in writing by the Project Manager, the expense of rectifying the same shall be borne by DGPC.The Contractor shall afford all reasonable facilities and assistance to the Project Manager. The checking of any bench mark by the Project Manager shall not relieve the Contractor of his responsibility for the correctness thereof. The Contractor shall protect and preserve all benchmarks used in setting out the Works till date of submission of final bill under the Contract, unless the Project Manager directs otherwise.

GCC.26.1.3. **Contractor's Supervision**: The Contractor shall give or provide all necessary superintendence during the execution of Works, and the Contractor's representative or its deputy shall be on the Site to provide full-time superintendence of the execution as long as the Project Manager may consider necessary for the proper fulfilment of the contractual

Projects & Contract Department DGPC BHUTAN Contracts Section

obligations under the Contract. The Contractor shall provide and employ only technical personnel who are skilled and experienced in their respective callings and supervisory staff who are competent to adequately supervise the work at hand.

GCC.26.1.4. Labour

a. The Contractor shall engage and employ on the Site in the execution of the Works such skilled, semi-skilled and unskilled labour as is necessary for the proper and timely execution of the Contract. The Contractor is encouraged to use local labour that has the necessary skills. The Contractor shall not recruit, or attempt to recruit, staff and labour from amongst DGPC's personnel.

b. Unless otherwise provided in the Contract, the Contractor shall be responsible for the recruitment, transportation, accommodation, medical care and maintaining welfare facilities and catering of all labour, local or expatriate, required for the execution of the Contract and for all payments in connection therewith.

c. The Contractor shall pay rates of wages and observe conditions of labour, which are not lower than those established for the trade or industry where the work is carried out. If no established rates or conditions are applicable, the Contractor shall pay rates of wages and observe conditions, which are not lower than the general level of wages and conditions observed locally by employers whose trade or industry is similar to that of the Contractor.

d. The Contractor shall not engage child labour and shall conform to the labour laws/acts, rules and regulations of Bhutan in the execution of Contract work. A child who has not attained the age of 18 years shall not be employed in any work as a labourer. During the continuance of the Contract the Contractor and his Subcontractors shall abide at all times with the labour laws/acts, rules and regulations, including child labour, related enactment and rules made there under.

e. The Contractor shall be responsible, at his own cost, for obtaining all necessary permit(s) and/or visa(s) from the appropriate authorities for the entry of all labour and personnel to be employed on the Site into the Kingdom of Bhutan.The Contractor shall submit to DGPC for its approval; details and bio-data of all expatriate personnel which he proposes to engage for the performance of Works under the Contract, atleast thirty (30) days prior to their departure for Bhutan. Such data for each personnel shall contain the name, his present address, his assignment and responsibility in connection with the Works, and a short resume of his qualifications, experience etc., in relation to the works to be performed by him.

f. Any expatriate personnel deployed on the Works at Site, if found unsuitable or unacceptable later on to RGoB/DGPC, shall within a reasonable time, be repatriated by the Contractor, who shall make alternative arrangements for providing a suitable replacement.

g. No person brought to Bhutan for the completion of Works shall be repatriated without the consent of the Project Manager on a written request from the Contractor for such repatriation giving reasons thereof. The Project Manager may give permission for such repatriation provided it is satisfied that the progress of Works shall not suffer due to such repatriation/replacement.

h. The Contractor shall at all times during the progress of the Contract use its best endeavours to prevent any unlawful, riotous or disorderly conduct or behaviour by or amongst its employees and the labour of its Subcontractors for the preservation of peace and protection of persons and property at the Site and its surroundings.

Projects & Contract Department DGPC BHUTAN Contracts Section

i. The Contractor shall, in all dealings with its labour and the labour of its Subcontractors currently employed on or connected with the Contract, pay due regard to all recognized festivals, official holidays, religious or other customs.

j. The Contractor and his Subcontractor shall comply with all relevant local laws and regulations pertaining to labour and expatriate personnel issued by RGoB. The Contractor shall indemnify DGPC in respect of all claims that may be made against DGPC for non-compliance thereof by the Contractor. In case of non-compliance by the Contractor, the Project Manager may take such actions as may be necessary for compliance of the various labour laws and recover the costs thereof from the Contractor.

k. The Contractor shall, deliver to the Project Manager or Project Manager's representative, a report in such form and at such intervals as the Project Manager may prescribe, regarding (i) the number and names of employees/labour of different categories engaged by the Contractor from time to time on the Site and (ii) Contractor's Equipment deployed on the Site for completion of Works.

GCC.26.2. **Contractor's Equipment**

GCC.26.2.1. All Contractor's Equipment brought by the Contractor onto the Site shall be deemed to be intended to be used exclusively for the execution of the Contract. The Contractor shall not remove the same from the Site without the Project Manager's consent that such Contractor's Equipment is no longer required for the execution of the Contract.

GCC.26.2.2. The Contractor shall deploy construction equipment as per agreed schedule. Provided further that in case of slow rate of progress of Works, the Contractor should supplement the agreed schedule of Contractor's Equipment with additional construction equipment so as to ensure completion of Works within Time for Completion at no extra cost to DGPC.

GCC.26.2.3. Unless otherwise specified in the Contract, upon completion of the Works, the Contractor shall remove from the Site all Contractor's Equipment brought by the Contractor onto the Site and any surplus materials remaining thereon.

GCC.26.2.4. If the Contractor does not make available at site the equipments committed for the Contract, the hiring charges of such equipments shall be deducted at a rate stipulated in the SCC per month for every month of absence for a period of one to four months after which the deductions shall be discontinued and the contractor's failure to produce such equipments at site shall be treated as a fundamental breach of contract.

GCC.26.2.5. DGPC will, if requested, use its best endeavours to assist the Contractor in obtaining any government permission required by the Contractor for the export of the Contractor's Equipment imported by the Contractor for use in the execution of the Contract that is no longer required for the execution of the Contract.

GCC.26.3. **Site Regulations and Safety**

GCC.26.3.1. DGPC and the Contractor shall establish Site regulations setting out the rules to be observed in the execution of the Contract at the Site and shall comply therewith. The Contractor shall prepare and submit to DGPC, with a copy to the Project Manager, proposed Site regulations for the DGPC's approval, which approval shall not be unreasonably withheld. Notwithstanding, the approval by the Project Manager the Contractor shall be responsible for the adequacy, stability and safety of all Site operations and methods of execution of the Contract.

GCC.26.3.2. Such Site regulations shall include, but shall not be limited to, rules in respect of security, safety of the Works, gate control, sanitation, medical care, and fire prevention and accident prevention.



GCC.26.3.3. The Contractor shall appoint an accident prevention officer at the Site responsible for maintaining safety and protection against accidents. This person shall be qualified for this responsibility and shall have the authority to issue instructions and taken protective measures to prevent accidents. Throughout the execution of the Works, the Contractor shall provide whatever is required by this person to exercise this responsibility and authority.

GCC.26.3.4. The Contractor shall be responsible for the safety of all activities on the Site.

GCC.26.3.5. Contractor shall assume full responsibility and comply with all applicable safety regulations for the adequacy and safety of site operations and methods of construction and he shall adopt measures to prevent injuries to persons or damage to properties or utilities. He shall hold the DGPC harmless from any liability for loss or damage resulting from his failures to take the necessary precautions. He shall avoid undue interference with private business, public travel, or with the work of other contractors. He shall take steps to protect the environment and to minimize noise, pollution or other undesirable effects resulting from his method of operation.

GCC.26.3.6. The Contractor shall send, to the Project Manager, details of any accident as soon as practicable after its occurrence. The Contractor shall maintain records and make reports connecting health, safety, and welfare of persons, and damage to property, as the Project Manager may reasonably require.

GCC.26.4. **Opportunities for other contractors**

GCC.26.4.1. The Contractor shall, upon written request from DGPC or the Project Manager, give all reasonable opportunities for carrying out the work to any other contractors employed by DGPC on or near the Site. If the Contractor so requires, DGPC shall facilitate the Contractor to make use the facilities, for the purpose of execution of the Contract, created by other contractors in or around the Site. In the process of availing such facilities, if any damage is caused to the works as a result of such usage, the Contractor shall be responsible to make good such damage at his cost.

GCC.26.4.2. If the Contractor, upon written request from DGPC or the Project Manager, makes available to other contractors, any roads or ways, the maintenance for which the Contractor is responsible; permits the use by such other contractors of the Contractor's Equipment, or provides any other service of whatsoever nature to such other contractors, the Contractor shall agree with other contractors the reasonable remuneration for the usage of such equipment or the provision of such services.

GCC.26.4.3. The Contractor shall also so arrange to perform its work as to minimize, to the extent possible, interference with the work of other contractors. The Project Manager shall determine the resolution of any difference or conflict that may arise between the Contractor and other contractors and the workers of DGPC in regard to their work.

GCC.26.4.4. The Contractor shall notify the Project Manager promptly of any defects in the other contractors' work that come to its notice, and that could affect the Contractor's work. The Project Manager shall determine the corrective measures, if any, required to rectify the situation after inspection of the Works.

GCC.26.4.5. In all matters of conflict of interest with other contractors, the Project Manager shall convey his decision which shall be final and binding on the Parties.

GCC.26.5. **Emergency Work**

If, by reason of an emergency arising in connection with and during the execution of the Contract, any protective or remedial work is necessary as a matter of urgency to prevent damage to the Works, the Contractor shall immediately carry out such work.

Projects & Contract Department DGPC BHUTAN Contracts Section

If the Contractor is unable or unwilling to do such work immediately, the Project Manager may do or cause such work to bedone by his own or other means, as he may determine it necessary in order to prevent damage to the Works. In such event the Project Manager shall, as soon as practicable after the occurrence of any such emergency, notify the Contractor in writing of such emergency, the work done and the reasons thereof. If the work done or caused to be done by the Project Manager is work that the Contractor was liable to do at its own expense under the Contract, the reasonable costs incurred by DGPC in connection therewith shall be paid by the Contractor to DGPC.

GCC.26.6. **Site Clearance**

GCC.26.6.1. **Site Clearance in course of performance**: In the course of carrying out the Contract, the Contractor shall keep the Site reasonably free from all unnecessary obstruction, store or remove any surplus materials, clear away any wreckage, rubbish or temporary works from the Site, and remove any Contractor's Equipment no longer required for execution of the Contract.

GCC.26.6.2. **Clearance of Site after completion**: After completion of all parts of the Works, the Contractor shall clear away and remove all wreckage, rubbish and debris of any kind from the Site, and shall leave the Site and Works clean and safe to the satisfaction of the Project Manager.

GCC.26.7. **Watching and Lighting**

The Contractor shall provide and maintain at its own expense all lights, guards, fencing, and watching when and where necessary or as required by the Project Manager for the proper execution and the protection of the Works, or for the safety of the owners and occupiers of adjacent property and for the safety of the public.

GCC.26.8. **Working hours**

GCC.26.8.1. Unless otherwise provided in the Contract, no work shall be carried out outside normal working hours and on locally recognized days of rest and on public holidays of the Kingdom of Bhutan without prior written consent of Project Manager, except where work is necessary or required to ensure safety of the Works or for the protection of life, or to prevent loss or damage to property. The provisions of this GCC.26.8.1 shall not apply to any work which is customarily carried out by rotary or double-shifts. Notwithstanding the above provisions, female labour shall not be employed in night shifts.

GCC.26.8.2. Notwithstanding GCC.26.8.1 or GCC.26.1.4, if and when the Contractor considers it necessary to carry out work outside normal working hours or on public holidays so as to meet the Time for Completion and requests the Project Manager's consent thereto, Project Manager shall not unreasonably withhold such consent.

GCC.26.9. **Protection of the environment**

GCC.26.9.1. The Contractor shall take all reasonable steps to protect the environment on and off the Site and to avoid damage or nuisance to persons or to property of the public or others resulting from pollution, noise or other causes arising as a consequence of his methods of operation, and shall preserve and protect all existing vegetation such as trees on or adjacent to the Site which do not unreasonably interfere with the execution of the Works. The Contractor shall make necessary arrangement to prevent pollution of the water in any adjacent water bodies including stream, springs, river and lakes, etc. The Contractor shall be solely responsible and liable for all damage caused by any pollution that may take place during the execution of the Works. The Contractor shall be held responsible for all unauthorised cutting of and damage to trees, by careless operation of his plant, equipment or materials and stockpiling of materials etc. and DGPC shall have no responsibility on this account.



GCC.26.10. **Explosives**

GCC.26.10.1. Permission for the use of explosives shall be obtained from the Project Manager or from any appropriate authority as directed by the Project Manager and all explosive materials shall be used only under close supervision. It shall be the responsibility of the Contractor to seek and obtain any necessary permits, and to ensure that the requirements of the authorities are complied with, in all respects. Failure to do so may result in the Project Manager withdrawing permission to use explosives. The indemnification provided for, under the GCC shall include indemnification against all claims in respect of any incident arising from the use of explosives.

GCC.26.11. **Possession of Site**

GCC.26.11.1. DGPC shall give access to and possession of all parts of the Site including special and/or temporary rights-of-way to the Contractor, free from all encumbrances by the period as specified in the SCC. DGPC reserves the right to hand over the Site in parts progressively to the Contractor. The Contractor will be required to take possession of the Site without any undue delay and commence the Works on the released fronts in parts without any reservation whatsoever. If possession of the Site or a part of Site, is not given by the date stated in the SCC, DGPC will be deemed to have delayed the start of the relevant activities and this will be an event to give rise for a claim under GCC.47 and extension of Time for Completion as per GCC.45.

GCC.26.11.2. The Contractor shall advise DGPC within thirty (30) days from the date of acceptance of the Letter of Award about his exact requirement of space for his office, storage area, fabrication areas, labour and staff colony (land if available) area, toilets, etc. The above requirement shall be reviewed by DGPC and space as decided by DGPC will be allotted to the Contractor for construction of his temporary structures / facilities like office, storage sheds, fabrication areas, labour and staff colony (land if available), toilets, etc. for Contractor's as well as his Subcontractor's use.

GCC.26.12. **Access to Site during execution of Works**

GCC.26.12.1. The Contractor shall allow DGPC's representatives or his nominee and any person authorized by DGPC's representatives or his nominee access to the Site or to any place where work in connection with the Contract is being carried out or is intended to be carried out and to any place where materials or plant are being fabricated and/or being assembled for the Works.

GCC.26.13. **Methodology of Construction & Equipment mobilization**

GCC.26.13.1. Methodology of construction and the work plan adopted by Contractor shall match the construction methodology/requirements specified in the Technical Specifications.

GCC.26.13.2. The suggested minimum plant & equipment and machinery to be deployed by the Contractor for the execution of Works shall be as given in Technical Specifications.

GCC.26.13.3. The Contractor shall arrange at his own expense all tools, plant and equipment required for execution of the Works.

GCC.27. Construction power and Construction water supply

GCC.27.1. **Power**

GCC.27.1.1. The Contractor shall submit to the Project Manager within thirty (30) days from the date of acceptance of the Letter of Award, his electrical power requirements, if any, to allow the planning of the same by the Project Manager. The Contractor shall be provided with free supply of electricity for the purposes of execution of the Works under the Contract only, at two (2) convenient locations in the Site. The Contractor shall make his own further

Projects & Contract Department DGPC BHUTAN Contracts Section

distribution arrangement. All temporary wiring must comply with local regulations and will be subject to Project Manager's inspection and approval before connection to supply.

GCC.27.1.2. The free supply of power shall not be provided for the use in the labour and staff colony. Power supply for labour and staff colony shall be provided at one point. It shall be the responsibility of the Contractor to take the power supply upto the point of his use. The Contractor shall be charged for power supply to labour and staff colony at rates prevalent as per the tariff of the electricity distribution entity at the Site. The Project Manager may consider additional points of power supply in deserving and exceptional cases. DGPC, however, does not guarantee uninterrupted power supply.

GCC.27.2. **Drinking Water**

GCC.27.2.1. The Contractor shall arrange for drinking water to his workmen/staff at Site and other water supply for all purposes for his labour and other personnel at the Site and labour/staff colony on his own. The quality of water should meet the requirements for which it is proposed to be used. All civil and structural work associated with the above including borings, pipelines, valves, pumps, tube wells, pump house, underground storage tank, over ground storage tank, water tankers, etc. whatsoever required for taking the water from the underground source to the place of use shall be provided/erected/constructed/maintained by the Contractor at his own cost.

GCC.27.3. **Construction Water**

GCC.27.3.1. Unless otherwise stated in the SCC, the Contractor shall draw water from the water supply mains provided at the Site at suitable points to be indicated by the Project Manager. All pipelines, pumps and other accessories required for taking the water from the mains to the Site shall be provided by the Contractor at his own cost. He shall not be entitled to any payment on account of the expenditure incurred in providing the pipelines, pumps, etc. No charges will be levied on the Contractor for the water drawn by him for the purposes of the construction work. Should the water, however, be used for either the colony or for manufacture, always subject to prior written permission of the Project Manager, the same shall be chargeable at a rate to be fixed by the Project Manager whose decision in this regard shall be final. However, the water supply shall have to be taken through a metered connection.

GCC.27.3.2. DGPC does not guarantee the maintenance of uninterrupted supply of water and in case of any interruptions of such supply of water; the Contractor shall be responsible for making at his own cost, alternative arrangements for water. The Project Manager also reserves the right to limit the quantity of water to be allowed to be drawn by the Contractor.

GCC.27.3.3. No claim for damages will be entertained by DGPC on account of interruption of water supply or limitation of quantity of water as aforesaid or on account of the water so supplied being not fit for construction purposes or on any other account in connection with such water supply.

GCC.27.3.4. It will be the responsibility of the Contractor to adequately treat the water at his cost before use for the intended purpose.

GCC.27.3.5. Where the Contractor makes his own arrangements for water required for the Works, nothing extra shall be paid for the same. He should make arrangements for storage of sufficient quantity of water required for at least a day's work.

GCC.28. Materials obtained from excavation

GCC.28.1. Materials of any kind obtained from excavation on the Site shall remain the property of DGPC and shall be disposed of as the Project Manager may direct except to the extent the construction materials obtained from the Site and used by the Contractor for the

Projects & Contract Department DGPC BHUTAN Contracts Section

Works as per the approval given by the Project Manager, subject to the payment by the Contractor of taxes and duties levied on such excavated materials used for the construction work as per GCC.17.

GCC.28.2. All fossils, coins, articles of value or antiquity and structures and other remains or things of geological or archaeological interest discovered on the Site shall be the absolute property of DGPC and the Contractor shall take reasonable precautions to prevent his workmen or any other person from removing or damaging any such article or thing. The Contractor shall immediately upon discovery thereof and before removal give notice to the Project Manager for such discovery and carry out the Project Manager's direction as to the disposition of the same, at the cost of DGPC.

GCC.28.3. If the Contractor suffers delay and/or incurs cost from complying with the instructions of the Project Manager, the Contractor shall be entitled to (a) an extension of time for any such delay, if completion is or will be delayed, and (b) payment of any cost which shall be incurred by the Contractor in this regard.

GCC.29. Materials

GCC.29.1. The Contractor shall, at his own expense, provide all materials required for the Works other than those which are to be issued by DGPC as specified in the SCC.

GCC.29.2. All materials to be provided by the Contractor shall be in conformity with the specifications laid down in the Technical Specification and the Contractor shall, if requested by the Project Manager, furnish proof to the satisfaction of the Project Manager that the materials so comply.

GCC.29.3. Wherever required by the Project Manager, the Contractor shall, at his own expense and without delay, provide samples of materials proposed to be used in the Works. The Project Manager shall within seven (7) days thereafter or within such further period as he may require, intimate to the Contractor in writing, whether samples are approved by him or not. If samples are not approved, the Contractor shall forthwith arrange for fresh samples complying with the Technical Specifications, for approval.

GCC.29.4. The Project Manager shall have full powers to require removal of any or all of the materials brought to Site by the Contractor which are not in accordance with the Contract specifications or do not conform in character or quality to samples approved by him. In case of default on the part of the Contractor in removing rejected materials, the Project Manager shall be at the liberty to have them removed by other means. The Project Manager shall have full powers to order the Contractor to provide other proper materials to be substituted for rejected materials and in the event of the Contractor refusing to comply, he may cause the same to be supplied by other means. All costs, which may attend upon such removal and/or substitution, shall be borne by the Contractor.

GCC.29.5. The Project Manager shall be entitled to have tests carried out as specified in the Contract for any materials supplied by the Contractor other than those for which, as stated above, satisfactory proof has already been furnished, at the cost of the Contractor and the Contractor shall provide at his expense all facilities which the Project Manager may reasonably require for the purpose. If no tests are specified in the Contract, and such tests are required by the Project Manager, the Contractor shall provide all facilities required for the purpose and the charges for these tests including the cost of materials consumed/used in such tests shall be to the account of DGPC, except if the tests disclose that the said materials are not in accordance with the provisions of the Contract, then the same shall be to the account of the Contractor.

Projects & Contract Department DGPC BHUTAN Contracts Section

GCC.30. Site Laboratory

GCC.30.1. As part of the Contract, the Contractor shall provide and maintain a Site laboratory for the testing of construction materials under the direction and general supervision of the Project Manager.

GCC.30.2. The laboratory building shall be constructed and installed with the appropriate facilities. Temperature and humidity controls shall be available wherever necessary during testing of samples.

GCC.30.3. All equipments shall be provided by the Contractor so as to be compatible with the testing requirements specified. The Contractor shall maintain the equipment in good working condition for the duration of the Contract.

GCC.30.4. The Contractor shall provide approved qualified personnel to operate and maintain the laboratory for the duration of the Contract. The number of staff and equipment available must at all times be sufficient to keep pace with the sampling and testing programme as required by the Project Manager.

GCC.30.5. The Contractor shall fully service the Site laboratory and shall supply everything necessary for its proper functioning, including all transport needed to move equipment and samples to and from sampling points on the Site, etc.

GCC.30.6. The Contractor shall re-calibrate all measuring devices whenever so required by the Project Manager and shall submit the results of such measurements without delay.

GCC.31. Quality Assurance Program

GCC.31.1. Sampling, testing and quality assurance requirements shall be as per the details given in Technical Specifications. All costs associated with testing of materials required as per Technical Specifications shall be deemed to be included in the rates/prices in the Bill of Quantities.

GCC.32. Inspection and Tests

GCC.32.1. The Contractor shall at its own expense carry out on the Site all such tests and/or inspections of the plant, materials and any part of the Works as are specified in the Technical Specifications. The Contractor shall provide all apparatus, assistance, documents and other information, electricity, equipment, fuel, consumables, instruments, labour, materials, and suitably qualified and experienced staff, as are necessary to carry out the specified tests efficiently.

GCC.32.2. DGPC and the Project Manager or their designated representatives shall be entitled to attend the aforesaid test and/or inspection, provided that DGPC shall bear all costs and expenses incurred in connection with such attendance.

GCC.32.3. Whenever the Contractor is ready to carry out any such test and/or inspection, the Contractor shall give a reasonable advance notice of the date of such test and/or inspection to the Project Manager.If DGPC or Project Manager (or their designated representatives) fails to attend the test and/or inspection, or if it is agreed between the Parties that such persons shall not do so, then the Contractor may proceed with the test and/or inspection in the absence of such persons, and may provide the Project Manager with a certified report of the results thereof.

GCC.32.4. The Project Manager may require the Contractor to carry out any additional test and/or inspection not required under the Technical Specification, provided that the Contractor's reasonable costs and expenses incurred in the carrying out of such test and/or inspection shall be added to the Contract Price. Further, if such test and/or inspection impede the progress of Works and/or the Contractor's performance of its other obligations under the



Contract, due allowance will be made in respect of the Time for Completion and the other obligations so affected.

GCC.32.5. If any plant, equipment or any part of the Works fails to pass any test and/or inspection or workmanship is found to be defective or otherwise not in accordance with the Technical Specifications, the Contractor shall either rectify or replace such plant, equipment or part of the Works and shall repeat the test and/or inspection upon giving a notice under GCC.32.3. All costs of such repeat tests shall be borne by the Contractor.

GCC.32.6. If any dispute or difference of opinion shall arise between the Parties in connection with or arising out of the test and/or inspection of the plant, equipment or part of the Works that cannot be settled between the Parties within a reasonable period of time, it may be referred to the Adjudicator for determination in accordance with GCC.9.1.

GCC.32.7. The Contractor shall afford DGPC and the Project Manager access at any reasonable time to the Site where the Works are being executed, in order to inspect the progress and the manner of execution of Works, provided that the Project Manager shall give the Contractor a reasonable prior notice.

GCC.32.8. The Contractor agrees that neither the execution of a test and/or inspection of plant, equipment or any part of the Works, nor the attendance by DGPC or the Project Manager, nor the issue of any test certificate, shall release the Contractor from any other responsibilities under the Contract.

GCC.32.9. No part of the Works or foundations shall be covered up on the Site without the Contractor carrying out any test and/or inspection required under the Contract. The Contractor shall give a reasonable notice to the Project Manager whenever any such part of the Works or foundations is ready or about to be ready for test and/or inspection; such test and/or inspection and notice thereof shall be subject to the requirements of the Contract. The Project Manager shall then without unreasonable delay carry out the test/inspection or measurement.

GCC.32.10. The Contractor shall uncover any part of the Works or shall make openings in or through the same as the Project Manager may from time to time require at the Site and shall reinstate and make good such part or parts.

If any part of the Works have been covered up at the Site after compliance with the requirement of GCC.32.9 and are found to be executed in accordance with the Contract, the expenses of uncovering, making openings in or through, reinstating, and making good the same shall be borne by DGPC, and the Time for Completion shall be reasonably adjusted to the extent that the Contractor has thereby been delayed or impeded in the performance of any of its obligations under the Contract.

GCC.32.11. Notwithstanding any previous test or inspection, the Project Manager may instruct the Contractor to:

a. Remove from the Site and replace any plant or materials which is not in accordance with the Contract,

b. Remove and re-execute any other work which is not in accordance with the Contract, and

c. Execute any work which is urgently required for the safety of the Works, whether because of an accident, unforeseeable event or otherwise.

The Contractor shall comply with the instruction within a reasonable time, which shall be the time (if any) specified in the instruction, or immediately if urgency is specified under sub-paragraph (c) above.

Projects & Contract Department DGPC BHUTAN Contracts Section

If the Contractor fails to comply with the instruction, DGPC shall be entitled to employ and pay other persons to carry out the Works. Except to the extent that the Contractor would have been entitled to payment for the work, the Contractor shall pay to DGPC all costs arising from this failure.

GCC.33. Measurement and Evaluation

GCC.33.1. The Works shall be measured, and valued for payment, in accordance with this clause.

GCC.33.2. All items having a financial value shall be entered in measurement book, level book, etc., prescribed by the Project Manager so that a complete record is obtained of all Works performed under the Contract.

GCC.33.3. Measurement shall be taken jointly by the Project Manager or his authorized representative and the Contractor or his authorized representative.

GCC.33.4. Before taking measurements of any part of Works, the Project Manager or his authorized representative for the purpose shall give a reasonable notice to the Contractor. If the Contractor fails to attend or send his authorized representative for taking the measurements after such a notice or fails to countersign or to record the objection, if any, within a week from the date of measurement, then in any such event measurements taken by the Project Manager or his authorized representative shall be taken to be correct measurements of the Works.

GCC.33.5. The Contractor shall, without extra charge, provide assistance with every appliance, labour, etc., necessary for taking measurements.

GCC.33.6. Measurements shall be signed and dated by both Parties each day on the Site on completion of measurement. If the Contractor objects to any of the measurements recorded, a note to that effect shall be made in the measurement book against the item objected to and such note shall be signed and dated by both the Parties engaged in taking the measurement. The decision of the Project Manager on any such dispute or difference or interpretation shall be final and binding on both the Parties and shall be beyond the scope of the provisions of settlement of disputes under the Contract.

GCC.33.7. Except as otherwise stated in the Contract:

a. measurement shall be made of the net actual quantity of each items of the Works, and

b. the method of measurement shall be in accordance with the Bill of Quantities/Technical Specifications.

c. in case of extra items, the Project Manager shall specify the method of measurement for such items at the time of his order for execution of such extra item.

GCC.33.8. Except as otherwise stated in the Contract, the Project Manager shall proceed to agree or determine the Contract Price by evaluating each item of work, applying the measurement agreed or determined in accordance with the above clauses and the appropriate rate or price for the item.

GCC.34. Tests on Completion

GCC.34.1. The Contractor shall give to the Project Manager not less than twenty one (21) days' notice of the date after which the Contractor will be ready to carry out each of the tests on completion if so specified in the Technical Specifications Section VI. Unless otherwise agreed, tests on completion shall be carried out within fifteen (15) days after this date, on such day ordays as the Project Manager shall instruct.

GCC.34.2. As soon as the Works, or a part thereof, have passed any tests on completion, the Contractor shall submit a certified report of the results of these tests to DGPC.

Projects & Contract Department DGPC BHUTAN Contracts Section

GCC.34.3. If the tests on completion are being unduly delayed by the Contractor, DGPC may by notice require the Contractor to carry out the tests within twenty one (21) days after receiving the notice. The Contractor shall carry out the tests on such day or days within that period as the Contractor may fix and of which he shall give notice to DGPC.

GCC.34.4. If the Contractor fails to carry out the tests on completion within the period of twenty-one (21) days, the DGPC's personnel may proceed with the tests at the risk and cost of the Contractor. The tests on completion shall then be deemed to have been carried out in the presence of the Contractor and the resultof the tests shall be accepted as accurate.

GCC.34.5. If the Works, or a part, fail to pass the tests on completion, DGPC may require the failed tests on completion on any related work, to be repeated under the same terms and conditions.

GCC.34.6. If the Works, or a part, fail to pass the tests on completion repeated under GCC.34.5 above, the Project Manager shall be entitled to:

a. order further repetition of tests on completion as provided under GCC.34.5;

b. if the failure deprives DGPC of substantially the whole benefit of the Works or part, reject the Works or part (as the case may be), in which event DGPC shall have the same remedies as are provide in Defect Liability; or

c. issue a Taking-Over Certificate, if DGPC so requests.

GCC.34.7. In the event of sub-paragraph (c) above, the Contractor shall proceed in accordance with all other obligations under the Contract, and the Contract Price shall be reduced by such amount as shall be appropriate to cover the reduced value to DGPCas a result of this failure. Unless the relevant reduction for this failure is stated (or its methods of calculation is defined) in the Contract, DGPCmay require the reduction to be agreed by both Parties (in full satisfaction of this failure only) and paid before this Taking-over Certificate is issued.

GCC.35. Taking Over of Works

GCC.35.1. The Works shall be taken over by DGPC after completion, either in full or in part (where separate Time for Completion has been provided for such part of the Works) upon successful completion of Works by the Contractor in accordance with provisions of Contract.

GCC.35.2. On successful completion of Works or any part thereof (where separate Time for Completion has been provided for such part of the Works) and upon request of the Contractor for taking over the Works and issuance of Taking Over Certificate (TOC), DGPC shall within forty-five (45) days from the date of notice given by the Contractor either issue the TOC or reject the application giving his reasons and specifying the defect to be remedied or any unfinished work required to be done by the Contractor to enable the TOC to be issued. If required, a joint survey of the Works can be undertaken by the Project Manager and Contractor to identify the defects and unfinished work. The Contractor shall accordingly remedy the defects and/or complete the remaining part of the Works, if any, within fifteen (15) days of the notice of such defects given by the Project Manager and give a fresh notice for taking over of the Works.

GCC.35.3. TOC shall be issued to the Contractor specifying the date on which the Works or any part thereof were complete and ready for taking over, after ascertaining the following:

a. The Works under the Contract have been satisfactorily completed by the Contractor as per the provisions of Contract.

b. The Contractor has cleared the Site of all the surplus materials, wreckage, rubbish and removed all scaffoldings, shuttering materials, labour huts/ sheds, cleaned the



dirt from Site, temporary sanitary and water supply arrangements and all electrical gadgets/ equipments/ switches, wiring, any wood work or any such item, as relevant to the Contract to the satisfaction of the Project Manager, except those required for carrying out rectification works.

c. All the defects have been rectified to the complete satisfaction of the Project Manager.

d. The Contractor has furnished to the Project Manager "as-built drawings" of the Works and operating and maintenance manuals, if any, as specified in the Technical Specifications, in the specified number of copies, showing all Works as executed as per the requirement of DGPC as to their size, referencing system and other relevant details.

GCC.35.4. Issuance of such certificates shall not relieve the Contractor of any of his obligations which otherwise were to be complied with under the terms and conditions of the Contract.

GCC.35.5. Notwithstanding the above-mentioned provisions, the issuance of TOC shall not be held up for delay in completion of minor outstanding works and rectification of defects that do not affect the use of the Works for their intended purpose. In such a case the Contractor shall however be required to give an undertaking that in case he fails to complete/rectify within a mutually agreed period, DGPCshall be at liberty to complete/rectify works at his risk and cost, and deduct an amount as may be considered appropriate by DGPC.

GCC.35.6. If DGPC fails to issue TOC or to reject the Contractor's request within forty-five (45) days of the latest notice given by the Contractor, and if the Works are substantially in accordance with the Contract, the TOC shall be deemed to have been issued on the last day of that period.

GCC.35.7. Any part of the Works for which no separate Time for Completion has been provided shall not be taken over or used by DGPC unless mutually agreed between the Parties.

GCC.35.8. Issuance of TOC for any part of the Works is only for the purpose of facilitating the Contractor to receive the payment for part of the Works completed and for determination of liquidated damages in respect thereof and shall not relieve the Contractor of his responsibilities under the Contract towards other parts of the Works.

F. GUARANTEES AND LIABILITIES

GCC.36. Liquidated Damages for delay

GCC.36.1. The Contractor guarantees that it shall attain completion of Works (or a part of Works for which a separate Time for Completion is specified) within the Time for Completion specified in SCC pursuant to GCC.11, or within such extended time to which the Contractor shall be entitled under GCC.45 hereof. For the purpose of determining the period of delay in the completion of Works, the period shall be calculated with reference to the date of commencement of Works and date of taking over of Works.

GCC.36.2. If the Contractor fails to attain completion of Works or any part thereof within the Time for Completion or any extension thereof under GCC.45, the Contractor shall pay to DGPC liquidated damages in the amount computed at the rates specified in the SCC. The liquidated damages so payable is a genuine pre-estimate agreed by the Parties hereto of the loss or damage which DGPC would have suffered on account of delay without giving any proof of loss or damage. The aggregate amount of such liquidated damages shall in no event exceed the "Maximum" limit which is ten percent (10%) of the Executed Price. Once the "Maximum" is reached, DGPC may consider termination of the Contract, pursuant to GCC.49.2.2. DGPC may without prejudice to other remedies under the

Projects & Contract Department DGPC BHUTAN Contracts Section

Contract deduct the amount of the liquidated damages from any monies due or becoming due to the Contractor or forfeit the Contract Performance Security.

Such payment shall completely satisfy the Contractor's obligation to attain completion of Works or the relevant part thereof within the Time for Completion or any extension thereof under GCC.45. However, the payment of liquidated damages shall not in any way relieve the Contractor from any of its obligations to complete the Works or from any other duties, obligations and liabilities of the Contractor under the Contract.

GCC.36.3. Bonus will be given for earlier completion of Works or part thereof if so specified in the SCC.

GCC.36.4. In case the Works as a whole is completed by the Contractor within the stipulated Time for Completion, the interim liquidated damages imposed for delays in not achieving the specified interim contract milestones will be refunded to the Contractor after issuance of the defect liability certificate.

GCC.36.5. DGPC, if not satisfied that the works can be completed by the Contractor within specified Time for Completion, and in the event of failure on the part of the Contractor to complete Works within further extension of time allowed as aforesaid, shall be entitled, without prejudice to any other right, or remedy available in that behalf, to rescind the Contract.

GCC.36.6. In the event of such rescinding/termination of the Contract as described above DGPC shall be entitled to recover liquidated damages up to ten percent (10%) of the Executed Price. The Contract Performance Security shall be adjusted towards liquidated damages. The balance work under the Contract shall be got completed in any other manner at the risk and cost of the Contractor.

GCC.37. Defect Liability

GCC.37.1. The Defect Liability Period shall be as specified in the SCC and shall commence from the date the Works are taken over by DGPC. Where any part of the Works is taken over separately, the Defects Liability Period for that part shall commence on the date it was taken over.

GCC.37.2. If during the Defect Liability Period any defect is found in the design, engineering, materials and workmanship of the Works executed by the Contractor, the Contractor shall promptly, in consultation and agreement with DGPC regarding appropriate remedying of the defects, and at its cost, repair, replace or otherwise make good such defect as well as any damage to the Works caused by such defect.

GCC.37.3. If the Contractor fails to commence the work necessary to remedy such defect or any damage to the Works caused by such defect within fifteen (15) days of the intimation of the defect, and complete the remedying of such defect within the time specified by DGPC, DGPC reserves the right to get such work done in a manner as mentioned hereunder:

a. carry out the work himself or by others, in a reasonable manner and at the Contractor's cost, but the Contractor shall have no responsibility for the work; and the Contractor shall pay to DGPC the costs reasonably incurred by DGPC in remedying the defect or damage;

b. require the Project Manager to agree or determine a reasonable reduction in the Contract Price; or

c. if the defect or damage deprives DGPC of substantially the whole benefit of the Works or any major parts of the Works, DGPC may terminate the Contract as a whole, or in respect of such major part, which cannot be put to the intended use. Without prejudice to any other rights, under the Contract or otherwise, DGPC shall then be entitled to recover all sums paid for the Works or for such part (as the case

Projects & Contract Department DGPC BHUTAN Contracts Section

may be), plus financing costs and the cost of dismantling the same, clearing the Site and returning plant and materials to the Contractor.

GCC.37.4. If the Works or any part thereof cannot be used by reason of such defect and/or making good of such defect, the Defect Liability Period of the Works or such part, as the case may be, shall be extended by a period equal to the period during which the Works or such part cannot be used by DGPC because of any of the aforesaid reasons. Upon correction of the defects in the Works or any part thereof by repair/replacement, such repair/replacement shall have the Defect Liability Period for a period of eighteen (18) months from the time such replacement/repair of the Works or any part thereof has been completed.

GCC.37.5. On completion of the Defect Liability period of the whole of the Works or where Works have been taken over in parts, DGPC shall issue a Defect Liability Certificate to the Contractor certifying the successful completion of defect liability period.

GCC.38. Limitations of Liability

GCC.38.1. Neither Party shall be liable to the other Party for loss of use of any Works, loss of profit, loss of any contract or for any indirect or consequential loss or damage, which may be suffered by the other Party in connection with the Contract, other than under GCC.22.

GCC.38.2. The aggregate liability of the Contractor to DGPC, whether under the Contract, in tort or otherwise, shall not exceed the total Contract Price, provided that this limitation shall not apply to the cost of repairing or replacing defective Works, or to any obligation of the Contractor to indemnify DGPC with respect to patent infringement.

GCC.38.3. In all cases the Party claiming a breach of Contract or a right to be indemnified in accordance with the Contract shall be obliged to take all reasonable measures to mitigate the loss or damage.

GCC.38.4. The limitation of liability shall not apply in any case of fraud, deliberate default or reckless misconduct by the defaulting Party.

G. RISK DISTRIBUTION

GCC.39. Protection of Works

The Contractor shall have total responsibility for protecting the Works till it is finally taken over by DGPC. No claim will be entertained by DGPC for any damage or loss to the Works and the Contractor shall be responsible for the complete restoration of the damaged works/equipments to its original condition to comply with the specification and drawings. Should any such damage to the Works occur because of other party not under Contractor's supervision or control, the Contractor shall settle his claim directly with the party concerned, and the Contractor shall proceed to repair the work immediately and no cause thereof will be assigned pending resolution of dispute.

GCC.40. Insurance

GCC.40.1. Before commencing the execution of the Works, the Contractor shall, without in any way limiting his obligations and responsibilities under this clause, indemnify DGPC against any damage/loss or injury which may occur to any property or to any person (including any employee of DGPC) by or arising out of carrying out of the Contract, except due to reasons of force majeure.

GCC.40.2. Towards this end, the Contractor shall arrange adequate insurance coverage, in the joint names of DGPC and the Contractor, from the date of commencement of the Works to the end of the respective periods specified below. The nature and content, amounts and deductibles on insurance shall be as further elaborated and detailed in the SCC for the following events which inter-alia will include the following:

Projects & Contract Department DGPC BHUTAN Contracts Section

Sl. No.	Nature of insurance	Period of insurance coverage
i	Loss of or damage to the Works including DGPC issued materials, if any	Upto the date of Taking Over of the last Works
ii	Loss of or damage to the Contractor's tools and plant	Upto the date of Taking Over of the last Works
iii	Loss of or damage to the property other than Works including those of third parties	Upto the completion of the Defects Liability Period
iv	Injury or death of personnel belonging to the Contractor, DGPC or any other party	Upto the completion of the Defects Liability Period

The insurance policy for (iv) above shall be taken from Bhutanese insurance companies.

GCC.40.3. Where DGPC's building or a part thereof is rented by the Contractor, he shall insure the entire building if the building or any part thereof is used by him for the purpose of storing or using materials of combustible nature as to which the decision of the Project Manager shall be final.

GCC.40.4. Contractor shall ensure that the insurance coverage of the above policies include any loss or damage to his staff, supervisors, engineers and others.

GCC.40.5. All monies payable by the insurers under such policy or policies shall be first to be paid to DGPC who shall pay to the Contractor in instalments for the purpose of rebuilding or replacement or repair of the damaged Works. Contractor's tools & plant and/or materials destroyed or damaged as the case may be. Such payments of monies will be made in a manner that the payments are commensurate with the progress and cost of the repair, replacement and reconstruction, as may be and as determined by the Project Manager in consultation with the Contractor.

GCC.40.6. Policies and certificate for insurance shall be delivered by the Contractor to the Project Manager.

GCC.40.7. The aforesaid insurance policy/policies shall provide that they shall not be materially modified/cancelled till the Project Manager has agreed to such modification or cancellation in writing.

GCC.40.8. Upon grant of the time extension by the Project Manager, it is understood that the Contractor's liability of indemnity will be extended suitably without any further action by DGPC and the Contractor shall promptly furnish documentary evidence to the Project Manager towards extension of insurance policies for the period of time extension.

GCC.40.9. The Contractor shall ensure that where applicable, his Subcontractor(s) shall take out and maintain in effect adequate insurance policies for their personnel and vehicles and for the part of the Works executed by them under the Contract, unless such Subcontractors are covered by the policies taken out by the Contractor.

GCC.40.10. If the Contractor and/or his Subcontractors (if any) shall fail to effect and keep in force the insurance coverage, referred to above or any other insurance which he/they may be required to effect under the terms of the Contract, then in any such case DGPC may, without being bound to, effect and keep in force any such insurance coverage and pay such premium or premiums, as may be necessary for that purpose from time to time and deduct the amount so paid by DGPC from any monies due or which may become due to the Contractor or recover the same as a debt due from the Contractor.

GCC.40.11. If the Contractor does not provide any of the policies and certificates required, DGPC with due notice to the Contractor may effect the insurance which the Contractor should have provided and recover the premiums DGPC has paid from the payments otherwise

Projects & Contract Department DGPC BHUTAN Contracts Section

due to the Contractor or, if no payment is due, the payment of the premiums shall be a debt due from the Contractor.

GCC.40.12. Nothing in this clause limits the obligations, liabilities or responsibilities of the Contractor, under the other terms of the Contract or otherwise. Any amounts not insured or not recovered from the insurers shall be borne by the Contractor in accordance with these obligations, liabilities or responsibilities. However, if the Contractor fails to effect and keep in force an insurance which is available and which it is required to effect and maintain under the Contract, and DGPC neither approves the omission nor effects insurance for the coverage relevant to this default, any moneys which should have been recoverable under this insurance shall be paid by the Contractor.

GCC.41. Unforeseen adverse physical Conditions

GCC.41.1. If, during the execution of the Contract, the Contractor shall encounter on the Site any unforeseen adverse physical conditions that could not have been reasonably foreseen prior to the date of the Contract Agreement by an experienced contractor on the basis of reasonable examination of the data relating to the Works provided by DGPC, and on the basis of information that it could have obtained from a visual inspection of the Site (if access thereto was available) or other data readily available to it relating to the Works, and if the Contractor determines that it will in consequence of such conditions incur additional cost and expense or require additional time to perform its obligations under the Contract that would not have been required if such physical conditions had not been encountered, the Contractor shall promptly, and before performing additional work or using additional plant, equipment, materials or Contractor's Equipment, notify the Project Manager in writing of:

a. the physical adverse conditions on the Site that could not have been reasonably foreseen and the reasons for which the Contractor considers such condition to be unforeseen

b. the additional work and/or plant, equipment, materials and/or Contractor's Equipment required, including the steps which the Contractor will or proposes to take to overcome such conditions

c. the extent of the anticipated delay

d. the additional cost and expense that the Contractor is likely to incur.

On receiving any notice from the Contractor under this clause GCC.41.1, the Project Manager and the Contractor shall jointly decide upon the actions to be taken to overcome the physical conditions encountered. Following such consultations, the Project Manager shall instruct the Contractor of the actions to be taken.

GCC.41.2. For this purpose, "physical condition" shall mean natural physical conditions and man-made and other physical obstructions and pollutants, which the Contractor encounters at the Site when executing the Works, including sub-surface and hydrological conditions but excluding climatic conditions.

GCC.41.3. Any reasonable additional cost and expense incurred by the Contractor in following the instructions from the Project Manager to overcome such physical conditions referred to in GCC.41.1 shall be paid by DGPC to the Contractor as an addition to the Contract Price.

GCC.41.4. However, before additional cost is finally agreed, the Project Manager may also review whether other physical conditions in any part of the Works were more favourable than could reasonably have been foreseen when the Contractor submitted his Bid. If and to the extent that these more favourable conditions were encountered, the Project Manager may decide the reduction in cost which were due to these conditions, which may be included (as deductions) in the Contract Price. However, the net effect of all adjustments under



GCC.41.3 above and all these reductions, for all the physical conditions encountered in any part of Works, shall not result in a net reduction in the Contract Price.

GCC.41.5. If the Contractor is delayed or impeded in the performance of the Contract because of any such physical conditions referred to in GCC.41.1, the Time for Completion shall be extended in accordance with GCC.45.

GCC.41.6. Failure to reach an agreement with the Contractor on reasonable additional cost and additional Time for Completion under GCC.41.3 and GCC.41.4 above, the matter shall be referred for settlement by the Adjudicator.

GCC.42. Change in Laws and Regulations

GCC.42.1. If, after the date thirty (30) days prior to the last date of Bid submission, any law, regulation, ordinance, order or by-law having the force of law is enacted, promulgated, abrogated or changed in the Kingdom of Bhutan (which shall be deemed to include any change in interpretation or application by the competent authorities) that subsequently affects the costs and expenses of the Contractor and/or the Time for Completion, the Contract Price shall be correspondingly increased or decreased, and/or the Time for Completion shall be reasonably adjusted to the extent that the Contractor has thereby been affected in the performance of any of its obligations under the Contract. Notwithstanding the foregoing, such additional or reduced costs shall not be separately paid or credited if the same has already been accounted for in the price adjustment provisions where applicable, in accordance with GCC.15.

GCC.43. Force Majeure

GCC.43.1. "Force Majeure" shall mean any event or circumstance beyond the control of DGPC or of the Contractor, as the case may be, and which is unavoidable notwithstanding the reasonable care of the Party affected and which substantially affect the performance of the Contract. The event and circumstances of Force Majeure shall include, without limitation, the following:

a. war, hostilities or warlike operations (whether a state of war be declared or not), invasion, act of foreign enemy and civil war;

b. rebellion, revolution, insurrection, mutiny, usurpation of civil or military government, conspiracy, riot, civil commotion and terrorist acts;

c. confiscation, nationalization, mobilization, commandeering or requisition by or under the order of any government or de-jure or de-facto authority or ruler or any other act or failure to act of any government authority;

d. strike by persons other than Contactor's or Subcontractors employees/workers/labourers, sabotage, lockout, freight embargo, import restriction, port congestion, lack of usual means of public transportation and communication, industrial dispute, shipwreck, epidemics, quarantine and plague;

e. earthquake, landslide, volcanic activity, fire, flood or inundation, tidal wave, typhoon or cyclone, hurricane, storm, lightning, or other inclement weather condition (Inclement weather conditions shall either be in winter or in monsoon season which results in stoppage of work and such stoppage of work is duly recorded in the hindrance records maintained by the Druk Green for each contract. Provided where for the period of monsoon, the completion time has already been excluded), nuclear and pressure waves or other natural or physical disaster;

f. shortage of labor, materials or utilities where caused by circumstances that are themselves Force Majeure.



GCC.43.2. If either Party is prevented, hindered or delayed from or in performing any of its obligations under the Contract by an event of Force Majeure, then it shall notify the other in writing of the occurrence of such event and the circumstances thereof within fifteen (15) days after the occurrence of such event.

GCC.43.3. The Party shall, having given notice, be excused performance of such obligations for so long as such Force Majeure prevents it from performing them. The Time for Completion shall be extended in accordance with GCC.45.

GCC.43.4. The Party or Parties affected by the event of Force Majeure shall at all times use reasonable efforts to mitigate the effect thereof upon its or their performance of the Contract and to fulfill its or their obligations under the Contract so far as reasonably practicable.

GCC.43.5. Delay or non- performance by either Party hereto caused by the occurrence of any event of Force Majeure shall not

a. constitute a default or breach of the Contract;

b. give rise to any claim for damages or additional cost or expense occasioned thereby

if and to the extent that such delay or non- performance is caused by the occurrence of an event of Force Majeure occurring after the Contract becomes effective.

GCC.43.6. If the performance of the Contract is substantially prevented, hindered or delayed for a single period of more than sixty (60) days or an aggregate period of more than one hundred and twenty (120) days on account of one or more events of Force Majeure during the currency of the Contract, the Parties will attempt to develop a mutually satisfactory solution, failing which the dispute shall be resolved in accordance with GCC.9.

GCC.43.7. Notwithstanding GCC.43.5, Force Majeure shall not apply to any obligation of DGPC to make payments to the Contractor herein.

GCC.43.8. Notwithstanding any other provision of this clause, if any event or circumstance outside the control of the Parties (including, but not limited to, Force Majeure) arises which makes it impossible or unlawful for either or both Parties to fulfil its or their contractual obligations or which, under the law governing the Contract, entitles the Parties to be released from further performance of the Contract, then upon notice by either Party to the other Party of such event or circumstance:

a. the Parties shall be discharged from further performance, without prejudice to the rights of either Party in respect of any previous breach of the Contract; and

b. the sum payable by DGPC to the Contractor shall be the same as would have been payable under GCC.49.1.3 if the Contract had been terminated under GCC.49.1.

GCC.43.9. Loss to any Party due to occurrence of Force Majeure event shall be borne by the respective Party. However, the reconstruction of the damaged Works shall be executed by the Contractor upon receiving the instructions from DGPC. The Contractor shall be paid for this work by DGPC at contract rates with suitable extension of Time for Completion. Provided further that cost of redoing of damaged Works due to Force Majeure events insurable as on Effective Date of Contract shall not be payable to the Contractor by DGPC.

GCC.43.10. Force Majeure shall not include (i) any event or circumstance which is within the reasonable control of the Parties and (ii) the following conditions, except to the extent that they are consequences of an event of Force Majeure:

a. Unavailability, late delivery, or changes in cost of the plant, machinery, Contractor's Equipment, materials, spare parts, oil and lubricants or other consumables required for the execution of the Works;

Projects & Contract Department DGPC BHUTAN Contracts Section

b. Delay in the performance by the Contractor and his Subcontractors or agents;

c. Strikes or labour disturbances at the facilities of the Parties;

d. Insufficiency of finances or funds; and

e. Non-performance caused by, or connected with, the Parties:

(i) Negligent or intentional acts, errors or omissions;

(ii) Failure to comply with any law; or

(iii) Breach of, or default under the Contract.

H. CHANGE IN CONTRACT ELEMENTS

GCC.44. Change in Works

GCC.44.1. Introducing a Change

GCC.44.1.1. DGPC shall have the right to propose, and subsequently require, that the Project Manager order the Contractor from time to time during the performance of the Contract to make any change, modification, addition/alteration or deletion to, in or from the Works in the form, quantity or quality of the Works or any part thereof (hereinafter called "Change"), provided that such Change falls within the general scope of the Works and does not constitute unrelated work and that it is technically practicable, taking into account both the state of advancement of the Works and the technical compatibility of the Change envisaged with the nature of the Works as specified in the Contract. Such changes shall include but not limited to the following:

a. increase or decrease in the quantity of any work included in the Contract,

b. omission or substitution of any work,

c. change the drawings, designs specifications, character or quality or kind of any work,

d. change the levels, lines, positions and dimensions of any part of the Works,

e. execution of additional work of any kind necessary for the completion of the Works,

f. change in any specified sequence, method or timing of construction of any part of the Works,

No such changes shall in any way vitiate or invalidate the Contract. The Contractor shall be bound to carry out the works in accordance with such instructions as may be given to him in writing by the Project Manager. However, the value, if any, of all such Change shall be taken into account in ascertaining the amount of the Contract Price.

GCC.44.1.2. The Contractor may from time to time during its performance of the Contract propose to DGPC (with a copy to the Project Manager) any Change that the Contractor considers necessary or desirable to improve the quality, efficiency or safety of the Works. DGPC may at its discretion approve or reject any Change proposed by the Contractor.

GCC.44.1.3. Notwithstanding GCC.44.1.1 and GCC.44.1.2, no change made necessary because of any default of the Contractor in the performance of its obligations under the Contract shall be deemed to be a Change, and such change shall not result in any adjustment of the Contract Price or the Time for Completion.

GCC.44.1.4. The Contractor shall be under obligation to agree for the Changes as may be required during the execution of the Contract as per directions of the Project Manager and execute such changes at the same rates included in the Contract, provided the total effect of such changes does not exceed the limit of plus/minus twenty percent (+-20%) of the Contract

Projects & Contract Department DGPC BHUTAN Contracts Section

Price. Such ceiling will however be applicable only for items of work/supply for which rates are provided in the Contract. Notwithstanding the aforesaid provision, the quantities for individual items, if specified in the Contract, can vary to any extent. No claim for revision of rates for any individual item in the Bill of Quantities shall be admissible irrespective of the extent to which the ordered quantity may get revised (+) or (-) during the actual execution of the Works. For Change beyond twenty percent (20%) of the Contract Price, the adjustment in the rates for Bill of Quantity items shall be made as per GCC.44.4.

GCC.44.1.5. The procedure on how to proceed with and execute Changes is specified in GCC.44.2 and GCC.44.3.

GCC.44.2. Changes originating from DGPC

GCC.44.2.1. If DGPC proposes a Change pursuant to GCC.44.1.1, it shall send to the Contractor a "Request for Change Proposal," requiring the Contractor to prepare and furnish to the Project Manager as soon as reasonably practicable a "Change Proposal," which shall include the following:

a. brief description of the Change;

b. effect on the Time for Completion;

c. estimated cost of the Change;

d. effect on any other provisions of the Contract.

GCC.44.2.2. The pricing of any Change shall, as far as practicable, be calculated in accordance with the rates and prices included in the Contract. If the rates and prices of any Change are not available in the Contract, the rates for such items as far as practicable shall be derived from the analogous/similar items in the Bill of Quantities. The decision to select analogous/similar items shall be taken by the Project Manager, which shall be conclusive and binding on the Contractor. In cases where analogous/similar items are not available in the Bill of Quantities, such items shall be treated as extra items. The rates for extra items shall be determined as per GCC.44.4.2.

GCC.44.3. Changes originating from Contractor

GCC.44.3.1. If the Contractor proposes a Change pursuant to GCC.44.1.2, the Contractor shall submit to the Project Manager a written "Application for Change Proposal," giving reasons for the proposed Change and including the information specified in GCC.44.2.1.

GCC.44.4. Adjustment of the Contract Price

GCC.44.4.1. If reduction or increase in the Contract Price due to Change is found to be more than twenty percent (20%) of the Contract Price, the Contract Price shall be adjusted as per the rates below:

Variation in value of work	Increase in payment for minus variation	Decrease in payment for plus variation
Upto 20%	Nil	Nil
Above 20% & up to 35%	6.00%	3.00%
Above 35% & up to 60%	8.00%	4.00%
Above 60% & up to 100%	10.00%	5.00%
Above 100%	-	5.00%

While working out the value of work for the purpose of variation, the extra items for which new rates have been paid and payment towards price adjustment; and the adjustment towards statutory variations shall not be considered.



Illustration

a) In case of variation in value of work by (plus) + sixty percent (60%), the payment for (60-20) percent, i.e. forty percent (40%) of value of work shall be decreased by four percent (4%). The reduction in Contract rates shall commence as soon as the value of work executed reaches 120% of Contract Price.

b) In case of variation in value of work by (minus) – fifty-five percent (55%), the payment for (55-20) percent i.e., thirty-five percent (35%) of value of work shall be increased by eight percent (8%).

GCC.44.4.2. The Contractor within fifteen (15) days from the receipt of an order to execute any extra item shall submit rate analysis to the Project Manager supported by documentary evidence of basic rates adopted therein; having regard to the cost of materials, actual wages of labour, and other operational costs. The analysis so provided by the Contractor shall form the basis for determination of rates for such extra items. Extra items of work/supply which are not provided in the Bill of Quantities shall be paid on the basis of Bhutan Schedule of Rates (BSR) after adjusting such rates for the place of Works and time period elapsed after the date of BSR. If rates for such extra items are not available in BSR, the rates for such items shall be determined based on the actual expenditure relating to that item including cost of materials, fabrication/machinery handling and erection at Site plus twenty percent (20%) towards overheads including profits. The price of varied items determined by the Project Manager shall be final and binding on the Contractor. No payment shall be made for the items of Works ordered to be omitted.

GCC.44.4.3. If there is delay in DGPC and the Contractor coming to an agreement on the rate of varied work, provisional rates at the rate of seventy-five percent (75%) of the rates as determined by DGPC will be payable till such time as the rates are finally determined. In any case, DGPC shall decide the rates within a maximum period of forty-five (45) days from the date of submission for the analysis of rates by the Contractor.

GCC.44.4.4. Items of works for which rates have been derived as per GCC.44.2.2 shall be eligible for price adjustment as per the price adjustment formula with base date as per the Contract. Rates for extra items, derived as per GCC.44.4.2 above, shall be eligible for price adjustment as per the price adjustment formula with base date corresponding to the date of input costs considered for working out the rates.

GCC.44.5. Day Work

GCC.44.5.1. For work of a minor or incidental nature not covered in the Bill of Quantities, the Project Manager may instruct that a Change shall be executed on a daywork basis.

GCC.44.5.2. The Contractor shall deliver each day to the Project Manager accurate statements in duplicate which shall include the following details of the resources used in executing the previous day's work:

a. the names, occupations and time of Contractor's employees,

b. the identification, type and time of Contractor's Equipment and temporary works, and

c. the quantities and types of plant and materials used.

GCC.44.5.3. One copy of each statement will, if correct, or when agreed, be signed by the Project Manager and returned to the Contractor. The Contractor shall then submit priced statements of these resources to the Project Manager for further approval and inclusion in the next running bill for payment.

GCC.44.6. Record of costs

Projects & Contract Department DGPC BHUTAN Contracts Section

GCC.44.6.1. In any case where the Contractor is instructed to proceed with a variation prior to the determination of the adjustment to the Contract Price in respect thereof, the Contractor shall keep records of the cost of undertaking the variation and of time expended thereon. Such records shall be open to inspection by the Project Manager at all reasonable times.

GCC.45. Extension of Time for Completion

GCC.45.1. The Time(s) for Completion specified in the SCC shall be extended by DGPC, if the Contractor is delayed or impeded in theperformance of any of its obligations under the Contract byreason of any of the following:

a. any Change in the Works as provided in GCC.44, or

b. any occurrence of Force Majeure as provided in GCC.43, or

c. any unforeseen or adverse physical conditions as provided in GCC.41, or

d. any suspension order given by DGPC under GCC.48 or reduction in the rate of progress pursuant to GCC.48.2 or

e. any changes in laws and regulations as provided in GCC.42 or

f. any act of omission on the part of DGPC or its authorized representative to the extent such omission has caused delay in the Contractor's performance of his work.

g. any failure to supply the items listed in SCC by DGPC, or

h. any act, omission or delay on the part of any other contractors employed by DGPC for executing work not forming part of this Contract, or

i. any delay or disruption of the Contractor's work by the relevant legally constituted public authorities of the Kingdom of Bhutan, provided the Contractor has diligently followed the procedures laid down by such authorities, or

j. any other default or breach of the Contract by DGPC.

by such period as shall be fair and reasonable in all the circumstances and as shall fairly reflect the delay or impediment sustained by the Contractor.

GCC.45.2. Except where otherwise specifically provided in the Contract, the Contractor shall submit to the Project Manager a notice in writing of a claim for an extension of the Time for Completion, together with particulars of the event or circumstance justifying such extension within thirty (30) days of the commencement of such event or circumstance. Within thirty (30) days after receipt of such notice and supporting particulars of the claim, DGPC shall agree upon the fair and reasonable period of extension, which shall be final and binding on the Contractor.

GCC.45.3. The Contractor shall at all times use its reasonable efforts to minimize any delay in the performance of its obligations under the Contract.

GCC.45.4. In no case the extension in Time for Completion will be permitted for the defaults on the part of the Contractor

GCC.46. Contractor's Claims

GCC.46.1. If the Contractor considers himself to be entitled to any extension of the Time for Completion and/or any additional payment, under any clause of GCC or otherwise in connection with the Contract, the Contractor shall give notice to DGPC, describing the event or circumstances giving rise to the claim. The notice shall be given as soon as practicable, and not later than thirty (30) days after the Contractor became aware, or should have become aware, or the event or circumstance.

Projects & Contract Department DGPC BHUTAN Contracts Section

GCC.46.2. If the Contractor fails to give notice of a claim within such period of thirty (30) days, the Time for Completion shall not be extended, the Contractor shall not be entitled to additional payment, and DGPC shall be discharged from all liability in connection with the claim. Otherwise, the following provisions of this sub-clause shall apply.

GCC.46.3. The Contractor shall also submit any other notices which are required by the Contract, and supporting particulars for the claim, as relevant to such event or Circumstances.

GCC.46.4. The Contractor shall keep such contemporary records as may be necessary to substantiate any claim, either on the Site or at another location acceptable to the Project Manager. Without admitting the DGPC's liability, the Project Manager may, after receiving any notice under this sub-clause, monitor the record-keeping and/or instruct the Contractor to keep further contemporary records. The Contractor shall permit the Project Manager to inspect all these records, and shall (if instructed) submit copies to the Project Manager.

GCC.46.5. Within forty-two (42) days after the Contractor became aware (or should have become aware) of the event or circumstances giving rise to the claim, or within such other period as may be proposed by the Contractor and approved by the Project Manager, the Contractor shall sent to the Project Manager a fully detailed claim which includes full supporting particulars of the basis of the claim and for the extension of time and/or additional payment claimed. If the event or circumstance giving rise to the claim has a continuing effect:

a) this fully detailed claim shall be considered as interim;

b) the Contractor shall send further interim claims at monthly intervals, giving the accumulated delay and/or amount claimed, and such further particulars as the Project Manager may reasonably require; and

c) the Contractor shall send a final claim thirty (30) days after the end of the effects resulting from the event or circumstances, or within such other period as may be proposed by the Contractor and approved by the Project Manager.

GCC.46.6. Within forty-two (42) days after receiving a claim or any further particulars supporting a previous claim, or within such other period as may be proposed by the Project Manager and approved by the Contractor, the Project Manager shall respond with approval, or with disapproval and detailed comments. He may also request any necessary further particulars, but shall nevertheless give his response on the principals of the claim within such time.

GCC.46.7. Each payment certificate shall include such amounts for any claim as have been reasonably substantiated as due under the relevant provision of the Contract. Unless and until the particulars supplied are sufficient to substantiate the whole of the claim, the Contractor shall only be entitled to payment for such part of the claims, as he has been able to substantiate.

GCC.46.8. The Project Manager shall proceed to determine (i) the extension (if any) of the Time for Completion (before or after its expiry), and/or (ii) the additional payment (if any) to which the Contractor is entitled under the Contract.

GCC.46.9. The requirements of this sub-clause are in addition to those of any other sub-clause, which may apply to a claim. If the Contractor fails to comply with this or any other sub-clause in relation to any claim, any extension of time and/or additional payment shall take account of the extent (if any) to which the failure has prevented or prejudiced proper investigation of the claim, unless the claim is excluded under the second paragraph of this sub-clause.

GCC.47. Claims towards idling of resources

GCC.47.1. Components of claim admissible hereunder towards additional cost incurred by the Contractor due to idling of resources in connection with execution of Contract for reasons given hereunder shall be evaluated by the Project Manager:

Projects & Contract Department DGPC BHUTAN Contracts Section

a) DGPC does not give possession to Site or a part of the Site free of all encumbrances by the Site possession date stated in the SCC;

b) DGPC modifies the schedule of other contractors in a way which affects the works of the Contractor under the Contract;

c) DGPC's representatives' does not issue Drawings, Technical Specifications or instructions required for the execution of Works as per agreed schedule;

d) Other contractors or DGPC does not work within the dates stated in the Contract that cause delay or extra work to the Contractor.

GCC.47.2. The evaluation of compensation towards idling of resources done by the Project Manager shall be final and binding on the Contractor. The procedure as provided in GCC.46 for settlement of claims shall also apply for such claims.

GCC.48. Suspension

GCC.48.1. Project Manager at any time may, by notice to the Contractor, order the Contractor to suspend performance of any or all of its obligations under the Contract. Such notice shall specify the obligation of which performance is to be suspended, the effective date of the suspension and the reasons thereof. The Contractor shall thereupon suspend performance of such obligation (except those obligations necessary for the care or preservation of the Works against any deterioration, loss or damage) until ordered in writing to resume such performance by the Project Manager.

If, by virtue of a suspension order given by the Project Manager, other than by reason of the Contractor's default or breach of the Contract, the Contractor's performance of any of its obligations is suspended for an aggregate period of more than ninety (90) days, then at any time thereafter and provided that at that time such performance is still suspended, the Contractor may give a notice to the Project Manager requiring that DGPC shall, within thirty (30) days of receipt of the notice, order the resumption of such performance or request and subsequently order a Change in the Works in accordance with GCC.44, excluding the performance of the suspended obligations from the Contract.

If DGPC fails to do so within such period, the Contractor may, by a further notice to the Project Manager, elect to treat the suspension, where it affects only a part of the Works, as a deletion of such part of the Works in accordance with GCC.44 or, where it affects the whole of the Works, as termination of the Contract under GCC.49.1.

GCC.48.2. Ifthe Contractor is unable to carry out any of its obligations under the Contract for any reason attributable to DGPC, including but not limited to DGPC's failure to provide possession of or access to the Site or other areas in accordance with GCC.26.11, or failure to obtain any governmental permit necessary for the execution and/or completion of the Works or failure to make any due payment even after a period of sixty (60) days from the due date; then the Contractor may by fifteen (15) days' notice to DGPC suspend performance of all or any of its obligations under the Contract, or reduce the rate of progress.

GCC.48.3. After the permission or instruction to proceed is given by the Project Manager, the Contractor and the Project Manager shall jointly examine the Works and the plant and materials affected by the suspension. The Contractor shall make good any deterioration or defect in or loss of the Works or plant or materials, which has occurred during the suspension.

GCC.48.4. If the Contractor's performance of its obligations is suspended for a cumulative period of more than thirty (30) days or the rate of progress is reduced pursuant to this clause GCC.48, then the Time for Completion shall be extended in accordance with GCC.45.1 equivalent to the period of suspension plus twenty-five percent (25%) thereof, and any

Projects & Contract Department DGPC BHUTAN Contracts Section

and all additional costs or expenses incurred by the Contractor as a result of such suspension or reduction shall be paid by DGPC, as considered reasonable, to the Contractor in addition to the Contract Price, except in the case of suspension order or reduction in the rate of progress by reason of the Contractor's faulty design, workmanship or materials or of the Contractor's failure to protect, store or secure the Works in accordance with GCC.48.1 or any other default or breach of the Contract.

GCC.48.5. During the period of suspension, the Contractor shall not remove from the Site any plant, equipment, material or any part of the Works or any Contractor's Equipment, without the prior written consent of DGPC.

GCC.49. Termination

GCC.49.1. Termination for DGPC's Convenience

GCC.49.1.1. DGPC may at any time decide to terminate the Contract, in whole or in part, for any reason whatsoever by giving the Contractor and a copy to the Project Manager a thirty (30) days prior notice of termination that refers to this clause GCC.49.1. The Contractor shall have no claim to any payment of compensation or otherwise whatsoever on account of any profit or advantage which he might have derived from the execution of the Works in full but which he did not derive in consequence of the said termination of the whole or part of the Works.

GCC.49.1.2. Upon receipt of the notice of termination under GCC.49.1.1, the Contractor shall either immediately or upon the date specified in the notice of termination

a. cease all further work, except for such work as DGPC may specify in the notice of termination for the sole purpose of protecting that part of the Works already executed, or any work required to leave the Site in a clean and safe condition;

b. terminate all subcontracts, except those to be assigned to DGPC pursuant to paragraph (d) (ii) below;

c. remove all Contractor's Equipment from the Site, repatriate the Contractor's and itsSubcontractors' personnel from the Site, remove from the Site any wreckage, rubbish and debris of any kind, and leave the whole of the Site in a clean and safe condition;

d. In addition, the Contractor, subject to the payment specified in GCC.49.1.3, shall

i. deliver to DGPC the parts of the Works executed by the Contractor up to the date of termination;

ii. to the extent legally possible, assign to DGPC all right, title and benefit of the Contractor to the Works and to the plant, equipment or material as at the date of termination, and, as may be required by DGPC, in any subcontracts concluded between the Contractor and its Subcontractors;

iii. deliver to DGPC all non-proprietary drawings, specifications and other documents prepared by the Contractor or its Subcontractors as at the date of termination in connection with the Works.

GCC.49.1.3. In the event of termination of the Contract under GCC.49.1.1, DGPC shall pay to the Contractor the following amounts:

a. the Contract Price, properly attributable to the parts of the Works executed by the Contractor as of the date of termination;

b. any amounts to be paid by the Contractor to its Subcontractors in connection with the Works under any subcontracts;

Projects & Contract Department DGPC BHUTAN Contracts Section

c. costs incurred by the Contractor in protecting the Works and leaving the Site in a clean and safe condition pursuant to paragraph (a) of GCC.49.1.2;

d. any cost incurred on preliminary Site work, i.e., access roads, labour huts, staff quarters and Site offices, storage accommodation and water storage tanks, etc.

- DGPC shall have the option to take over Contractor's facilities/materials or any part thereof either brought to Site or of which the Contractor is legally bound to accept delivery from suppliers (for incorporation in or incidental to the Works), provided, however, DGPC shall be bound to take over the materials or such portions thereof as the Contractor does not desire to retain. For materials taken over or to be taken over by DGPC, cost of such materials shall, however, take into account purchase price, cost of transportation and deterioration or damage which may have been caused to materials whilst in the custody of the Contractor.
- For Contractor's materials not retained by DGPC, reasonable cost of transporting such materials from Site to Contractor's permanent stores or to his other works, whichever is less. If materials are not transported to either of the said places, no cost of transportation shall be payable.

e. reasonable compensation for actual transfer of Contractor's Equipment from Site to Contractor's permanent place of work,

f. the cost of satisfying all other obligations, commitments and claims that the Contractor may in good faith have undertaken with thirdParties in connection with the Contract and that are not covered by paragraphs (a) through (e) above.

GCC.49.1.4. The Contractor shall, if required by the Project Manager, furnish to him wage books, time sheets and other relevant documents as may be reasonably necessary to enable him to certify the reasonableness the amount payable under this clause.

GCC.49.1.5. After the termination has taken effect under this clause DGPC shall promptly return the contract performance security to the Contractor.

GCC.49.2. Termination for Contractor's Default

GCC.49.2.1. DGPC, without prejudice to any other rights or remedies it may possess, may terminate the Contract forthwith in any of the following circumstances by giving a fifteen (15) days prior notice of termination with a copy to the Project Manager and its reasons thereof to the Contractor, referring to this clause GCC.49.2.1. If the Contractor:

a. becomes bankrupt or insolvent or goes into liquidation, has a receiving order issued against it, compounds with its creditors, or, if the Contractor is a corporation, a resolution is passed or order is made for its winding up (other than a voluntary liquidation for the purposes of amalgamation or reconstruction), a receiver is appointed over any part of its undertaking or assets, or if the Contractor takes or suffers any other analogous action in consequence of debt;

b. assigns or transfers or subcontracts (engagement of labour on piece work basis shall not be deemed to be subcontracting) the Contract in whole or in part or any right or interest therein or attempts to assign, transfer or subcontract in violation of the provision of GCC.50;

c. in the opinion of DGPC, has engaged in fraud or corruption, as defined in GCC.4 in competing for or in executing the Contract.

GCC.49.2.2. If the Contractor

a. has abandoned the Works or otherwise plainly demonstrates its intention not to continue performance of his obligations under the Contract;

Projects & Contract Department DGPC BHUTAN Contracts Section

b. has without valid reason failed to commence the Workspursuant to a notice given by the Project Manager to commence the Works under GCC.11 or has suspended (other than pursuant to GCC.48.2) the progress of Contractperformance for more than thirty (30) days after receiving a written instruction from DGPC to proceed;

c. persistently fails to execute the Contract in accordance with the Contract or persistently neglects to carry out its obligations under the Contract without just cause and does not make good such failure or neglect within reasonable period even after a written notice by the Project Manager;

d. refuses or is unable to provide sufficient materials, services or labour to execute and complete the Works in the manner specified in the program furnished under GCC.24.2 at rates of progress that give reasonable assurance to DGPC that the Contractor can attain completion of the Works by the Time for Completion as extended;

e. the liquidated damages to be levied in terms of the provisions under GCC.36.2 has reached a maximum of ten percent (10%) of the Contract Price and it appears to the Project Manager that the Contractor is unable to complete the Works.

then DGPC may, without prejudice to any other rights it may possess under the Contract, give a notice to the Contractor stating the nature of the default and requiring the Contractor to remedy the same. If the Contractor fails to remedy or to take steps to remedy the same within fifteen (15) days of its receipt of such notice, then DGPC may terminate the Contract forthwith, either in whole or in part, by giving a notice of termination to the Contractor that refers to this clause GCC.49.2.2.

GCC.49.2.3. Upon receipt of the notice of termination under GCC.49.2.1 or GCC.49.2.2, the Contractor shall, either immediately or upon such date as is specified in the notice of termination,

a. cease all further work, except for such work as DGPC may specify in the notice of termination for the sole purpose of protecting that part of the Works already executed, or any work required to leave the Site in a clean and safe condition;

b. terminate all subcontracts, except those to be assigned to DGPC pursuant to paragraph (d) below;

c. deliver to DGPC the parts of the Works executed by the Contractor up to the date of termination;

d. to the extent legally possible, assign to DGPC all right, title and benefit of the Contractor to the Works as at the date of termination, and, as may be required by DGPC, in anysubcontracts concluded between the Contractor and its Subcontractors;

e. deliver to DGPC all non-proprietary drawings, specifications and other documents prepared by the Contractor or its Subcontractors as at the date of termination in connection with the Works.

GCC.49.2.4. DGPC may enter upon the Site, expel the Contractor, and complete the Works itself or by employing any third party at the risk and cost of the Contractor. The Contractor shall not be allowed to remove any materials, plant and temporary works from the Site until the matter is amicably resolved. DGPC or any third party may then use the Contractor's materials, equipment, design documents for completing the Works. DGPC may, to the exclusion of any right of the Contractor over the same, take over and use Contractor's Equipment with the payment of a fair rental rate to the Contractor, with all the maintenance costs to the account of DGPC and with an indemnification by DGPC for all liability including damage or injury to persons arising out of DGPC's use of such

Projects & Contract Department DGPC BHUTAN Contracts Section

equipment, any Contractor's Equipment owned by the Contractor and on the Site in connection with the Works for such reasonable period as DGPC considers expedient for the completion of the Works.

Upon completion of the Works or at such earlier date as DGPC thinks appropriate, DGPC shall give notice to the Contractor that such Contractor's Equipment will be returned to the Contractor at or near the Site and shall return such Contractor's Equipment to the Contractor in accordance with such notice. The Contractor shall thereafter without delay and at its cost remove or arrange removal of the same from the Site.

GCC.49.2.5. Subject to GCC.49.2.6, the Contractor shall be entitled to be paid the following:

a. the Contract Price, properly attributable to the parts of the Works executed by the Contractor as of the date of termination;

b. any amounts to be paid by the Contractor to its Subcontractors in connection with the Works under any subcontracts;

c. costs incurred by the Contractor in protecting the Works and leaving the Site in a clean and safe condition pursuant to paragraph (a) of GCC.49.2.3.

Any sums due to DGPC from the Contractor accruing prior to the date of termination shall be deducted from the amount to be paid to the Contractor under this Contract. If DGPC is not able to recover its dues from the Contractor, the Contractor's Equipment may be sold be DGPC to recover this payment. Any balance of the proceeds from the sale of such Contractor's Equipment shall then be paid to the Contractor.

GCC.49.2.6. If DGPC completes the Works, the cost of completing the Works by DGPCtill the completion of Defect Liability Period shall be determined.

If the sum that the Contractor is entitled to be paid, pursuant to GCC.49.2.5, plus the reasonable costs incurred by DGPC incompleting the Works, exceeds the Contract Price, the Contractor shall be liable for such excess.

If such excess is greater than the sums due to the Contractor under GCC.49.2.5, the Contractor shall pay the balance to DGPC, and if such excess is less than the sums due to the Contractor under GCC.49.2.5, DGPC shall pay the balance to the Contractor.

DGPC and the Contractor shall agree, in writing, on the computation described above and the manner in which any sums shall be paid.

GCC.49.3. Termination by Contractor

GCC.49.3.1. The Contractor may terminate the Contract by giving a notice of fifteen (15) days to DGPC to that effect, referring to this clause GCC.49.3.1, if:

a. DGPC becomes bankrupt or insolvent, has a receiving order issued against it, compounds with its creditors, or, being a corporation, if a resolution is passed or order is made for its winding up (other than a voluntary liquidation for the purposes of amalgamation or reconstruction), a receiver is appointed over any part of its undertaking or assets, or if DGPC takes or suffers any other analogous action in consequence of debt;

b. DGPC substantially fails to perform its obligations under the Contract;

c. a prolonged suspension affects the whole of the Works.

GCC.49.3.2. If the Contract is terminated under GCC.49.3.1, then the Contractor shall immediately

a. cease all further work, except for such work as may be necessary for the purpose of protecting that part of the Works already executed, or any work required to leave the Site in a clean and safe condition;



b. terminate all subcontracts, except those to be assigned toDGPC pursuant to paragraph (d) (ii) below;

c. remove all Contractor's Equipment from the Site and repatriate the Contractor's and its Subcontractor's personnel from the Site;

d. In addition, the Contractor, subject to the payment specified in GCC.49.3.3, shall

i. deliver to DGPC the parts of the Works executed by the Contractor up to the date of termination;

ii. to the extent legally possible, assign to DGPC all right, title and benefit of the Contractor to the Works and to the plant, equipment or materials as of the date of termination, and, as may be required by DGPC, in any subcontracts concluded between the Contractor and its Subcontractors;

iii. deliver to DGPC all non proprietary drawings, specifications and other documents prepared by the Contractor or its Subcontractors as of the date of termination in connection with the Works.

GCC.49.3.3. If the Contract is terminated under GCC.49.3.1, DGPC shall pay to the Contractor all payments specified in GCC.49.1.3.

GCC.49.3.4. Termination by the Contractor pursuant to this clause GCC.49.3 is without prejudice to any other rights or remedies of the Contractor that may be exercised in lieu of or in addition to rights conferred by GCC.49.3.

GCC.49.4. In this clause GCC.49, in calculating any monies due from DGPC to the Contractor, account shall be taken of any sum previously paid by DGPC to the Contractor under the Contract, including any advance payment paid pursuant to GCC.13.

GCC.50. Assignment

GCC.50.1. The Contractor shall not, without the express prior written consent of DGPC, assign to any third party the Contract or any part thereof, or any right, benefit, obligation or interest therein or thereunder, except that the Contractor shall be entitled to:

(i) assign either absolutely or by way of charge any monies due and payable to it or that may become due and payable to it under the Contract in favour of its bankers;

(ii) assign to the insurers (in cases where the insurers have discharged the Contractor's loss or liability) of the Contractor's right to obtain relief from any other liable party.

GCC.51. Release from Performance

GCC.51.1. If the Contract is frustrated by the outbreak of war or by any other event entirely outside the control of either DGPCor the Contractor, the Project Manager shall certify that the Contract has been frustrated. The Contractor shall make the Site safe and stop work as quickly as possible after receiving this certificate and shall be paid for all work carried out before receiving it and for any work carried out afterwards to which a commitment was made.

Projects & Contract Department DGPC BHUTAN Contracts Section

SECTION V – SPECIAL CONDITIONS OF CONTRACT

Projects & Contract Department
DGPC
BHUTAN
Contracts Section

SPECIAL CONDITIONS OF CONTRACT

The following Special Conditions of Contract (SCC) shall supplement and/or amend the General Conditions of Contract (GCC). Whenever there is a conflict, the provisions herein shall prevail over those in the GCC.

GCC Clause Reference	Particulars
	A. CONTRACT AND INTERPRETATION
GCC.3.9	The Contract shall be deemed to have come into full force and effect from **the date of issuance of letter of award.**
GCC.8.1	The court of **Thimphu** shall have exclusive jurisdiction in all matters arising out of the Contract.
GCC.9.1.2	Disputes arising from the implementation of the provisions of the Contract shall be settled first by negotiations between the Contractor and DGPC in order to arrive at an amicable settlement
GCC.9.2.2	The Appointing Authority for the appointment of Adjudicator shall be: **Not Applicable**
GCC.9.2.5	The fees and expenditure to be paid to the Adjudicator shall be: **Not Applicable**
GCC.9.3.3	The parties shall in good faith resolve disputes arising out of the Contract through negotiated settlement. In the event, the parties cannot reach an amicable settlement through negotiations, within 60 days of the first notice to negotiate, the parties shall initiate judicial proceedings in the Royal Court of Justice, Thimphu, where, in either of the party's opinion, such judicial proceeding are necessary to preserve their rights.
GCC.9.3.3	The place of arbitration shall be: **Not Applicable**
	B. SUBJECT MATTER OF CONTRACT
GCC.11.1	The execution of the works shall commence from the **the date of issuance of letter of award.**
GCC.11.3	Completion of Works: The overall duration for the completion of survey works for all projects shall be 60 days from the date of issuance of Letter of Award. The submission of Topographical maps and report for the project shall be as follows: i. Topographical map of scale 1:1000/1:5,000 with 1 m/5m contour interval shall be submitted by 30 days from the date of issuance of Letter of Award. ii. Final draft report shall be submitted by 45 days from the date of issuance of Letter of Award. iii. Final report shall be submitted by 60 days from the date of issuance of Letter of Award.
	C. PAYMENT
GCC.13.2.2	Secured advance: **Not Applicable**
GCC. 14.	Payment Terms: 1. Ten (10 %) of the contract amount shall be paid as mobilization advance against the submission of unconditional Bank Guarantee/demand draft/cash warrant.



GCC Clause Reference	Particulars
	2. Seventy (70%) against the completion of each BoQ item after completing and submitting it to DGPC. 3. Fifteen (15%) against the submission of the Draft Report for each project. 4. Remaining Fifteen (15%) of the contract amount shall be released after the Consultant has submitted the Final Report incorporating all revisions and recommendations as specified in the validation report provided by DGPC and DGPC has issued its written acceptance/approval of the Final Report as complete and satisfactory
GCC.15.4	Contract Price Adjustment**: Not Applicable**
GCC.17.1	Notwithstanding GCC 17.1, the Contract Price is exclusive of GST. GST @5% shall be paid by DGPC as per revised charged basis.
GCC.17.4	The tax deducted at source (TDS) is **5 % of the gross value of invoice incase of International Bidder and 2% incase of Bhutanese bidders.**
GCC.18.2	The Contract Performance Security shall be **10% of the Contract Price** and shall be submitted in the form of an unconditional and irrevocable bank guarantee/demand draft issued by a bank/financial institution in Bhutan and shall be valid upto thirty (30) days beyond the completion of the work.
GCC.19.2 & GCC.19.3	Retention Money: **Not Applicable**
D. WORK EXECUTION	
GCC.23.1	The Project Manager: **shall be nominated prior to commencement of work.**
GCC.23.2.1	If the Contractor fails to deploy the key personnel as committed in the Bid document, the employer shall deduct the amount as per **hire charges of DGPC/CDCL.**
GCC.25.1	The Works or part of Works that can be subcontracted and the qualifying requirement for the selection of Subcontractors to perform such part are: **Not permitted**
GCC.26.2.4	If the Contractor fails to deploy the key equipment as committed in the Bid document, the employer shall deduct the hiring charges of such equipment as per **hire charges of DGPC/CDCL.** **The Contractor shall ensure that adequate spares maintained at the site to address any breakdowns of existing machinery and equipment. The execution of the works shall not be delayed due to the breakdown or unavailability of the required machinery/equipment or Spare parts.**
GCC.26.11.1	The Site possession dates shall be from **the date of issuance of letter of award**
GCC. 27.1 & GCC.27.3	The Contractor shall make its own arrangements for supply of power and water required for the Works at its own cost.
GCC.29.1	The DGPC will not issue any material for Completion of the Works and Contractor will be required to arrange all materials required for completion of works at its own cost.
F. GUARANTEES AND LIABILITIES	

<table>
<tr><th>GCC Clause Reference</th><th>Particulars</th></tr>
<tr><td>GCC.36.2</td><td>The applicable rate of liquidated damages will be as follows: 0.30% of the executed amount per day of delay with a maximum of 10% of the executed price.</td></tr>
<tr><td>GCC.36.3</td><td>There will be no bonus payment for early completion of the Works</td></tr>
<tr><td>GCC.37.1</td><td>The Defect Liability Period: Not Applicable</td></tr>
<tr><td colspan="2">G. RISK DISTRIBUTION</td></tr>
<tr><td>GCC.40.2</td><td>The nature and content, amounts and deductibles on insurance shall be as follows:
<table>
<tr><th>SN</th><th>Insurance</th><th>Amount Insured</th><th>Deductibles</th></tr>
<tr><td>1.</td><td>Loss of or damage to the Works including DGPC issued materials, if any</td><td>110% of the cost of Works</td><td>Minimum as per insurance policy</td></tr>
<tr><td>2.</td><td>Loss of or damage to the Contractor's tools and plant</td><td>110% of the cost of tools and plant</td><td>Minimum as per insurance policy</td></tr>
<tr><td>3.</td><td>Loss of or damage to the property other than Works including those of third parties</td><td>As permissible under the policy</td><td>Not applicable</td></tr>
<tr><td>4.</td><td>Injury or death of personnel belonging to the Contractor, DGPC or any other party</td><td>As permissible under the policy</td><td>Not applicable</td></tr>
</table></td></tr>
</table>

SECTION VI – TERMS OF REFERENCE (ATTACHED AS ANNEXURE I)

SECTION VII –FORMS

Projects & Contract Department
DGPC
BHUTAN
Contracts Section

SECTION VIIA - BIDDING FORMS

(Form No. 1 to Form No. 17)

Applicable Forms from this Bidding Forms section is to be submitted by the Bidder along with his Bid

Projects & Contract Department
DGPC
BHUTAN
Contracts Section

Form 1: Bid Security (Bank Guarantee)

(On non-judicial stamp paper of the value relevant to the place of execution)

(To be kept in envelope I)

Bank Guarantee No. .....
Date.....

To

[DGPC's Name and Address]

Dear Sir/ Madam,

In accordance with NIT No. ....., M/s ..... having its Registered/Head Office at ..... (here-in-after called the 'Bidder') wish to participate in the said Tender for .....*[Name of Works]* .....

As an irrevocable bank guarantee against Bid Security for an amount of .....[*insertcurrency and amount in words and figures*]*..... valid up to.....*[insert date@]*.....is required to be submitted by the Bidder as a condition precedent for participation in the said Tender which amount is liable to be forfeited on the happening of any of the events mentioned in the Bidding Document.

We, the ..... *[Name & address of the Bank]* ..... having our Head Office at ..... (#) ..... guarantee and undertake to pay immediately on demand by the Druk Green Power Corporation Limited (DGPC) or its authorized representative, the amount of .....*[insert currency and amount in words and figures*]*..... without any reservation, protest, demand and recourse. Any such demand made by DGPC shall be conclusive and binding on us irrespective of any dispute or difference raised by the Bidder.

This Guarantee shall be irrevocable and shall remain valid up to .....(@)..... If any further extension of this guarantee is required, the same shall be extended to such required period on receiving instructions from M/s..... *[Bidder's Name]*..... on whose behalf this guarantee is issued.

All rights of DGPC under this Guarantee shall be forfeited and the Bank shall be relieved and discharged from all liabilities there under unless a demand or claim is lodged by DGPC under this Guarantee against the Bank within thirty (30) days from the above mentioned expiry date of validity or, from that of the extended date.

In witness where of the Bank, through its authorised officer, has set its hand and stamp on this.....day of.....20.....at.....

WITNESSES:

1.
……
(Signature)

SIGNATURE OF AUTHORIZED SIGNATORY OF THE BANK

1.
……
(Signature)

Projects & Contract Department * DGPC BHUTAN * Contracts Section

……	……
(Name)	(Name)
……	……
(Official Address)	(Designation)
	Authorized vide
	Power of Attorney No:…….
	Date…….
2.	2.
……	……
(Signature)	(Signature)
……	……
(Name)	(Name)
……	……
(Official Address)	(Designation)
	Authorized vide
	Power of Attorney No:…….
	Date…….

Note: (*) Shall be as specified in the BDS.

(@) The Bid security shall be valid till the date as specified in BDS.

(#) Complete mailing address of the Head Office and issuing branch of the Bank to be given with fax no./telephone no. of the contact person

The Bank Guarantee shall be from a bank as per provisions of ITB

The Stamp paper of appropriate value shall be purchased in the name of the bank issuing the Guarantee.

Projects & Contract Department
DGPC
BHUTAN
Contracts Section

Form 2: Certificate Regarding Acceptance of Important Conditions

(To be kept in Envelope II)

To

[DGPC's Name and Address]

Dear Sir/Madam,

With reference to our Bid dated.....for.....*[insert name of the Works]*.....against NIT No....., we hereby conform that we have read the provisions of following clauses and further confirm that notwithstandinganything stated elsewhere to the contrary, the stipulations of theseclausesare acceptable to us and wehave not taken any deviation to any of these clausesanywhere in the Bid:

[List of clauses to be inserted as per BDS with clause reference no., and heading of the clause and document name]

i. .....
ii. .....
iii. .....
iv. .....
v. .....
vi. .....
vii. .....
viii. .....
ix. .....

We further confirm that any deviation to the above clauses, found anywhere in our Bid, implicit or explicit, shall stand unconditionally withdrawn without any cost implication whatsoever to DGPC failing which the Bid security may be forfeited

Date : Signature.....

Place : Name.....

Designation.....

Seal.....

Note: The above certificate is to be submitted in the sealed envelope along with the Technical Bid (envelope II). In absence of this certificate the Bid shall be rejected and returned



Form 3: Integrity Pact Statement

[Integrity Pact Statement pre-signed by the DGPC authorised signatory, as provided by the Anti-Corruption Commission (ACC of the Royal Government of Kingdom of Bhutan from time to time is to be used.]

1. **General:**

Whereas *(Name of head of the procuring agency or his/her authorized representative, with power of attorney)* representing the (*Name of procuring agency*), Druk Green Power Corporation Limited, hereinafter referred to as the **"Employer"** on one part, and *(Name of bidder or his/her authorized representative, with power of attorney)* representing M/s. (*Name of firm*), hereinafter referred to as the **"Bidder"** on the other part hereby execute this agreement as follows:

1.1. This agreement shall be a part of the standard bidding document, which shall be signed by both the parties at the time of purchase of bidding documents and submitted along with the tender document. This IP is applicable only to "**large**" scale works, goods and services, the threshold of which will be announced by the government from time to time. The signing of the IP shall not apply to framework contracting such as annual office supplies etc.

2. **Objectives:**

Whereas, the Employer and the Bidder agree to enter into this agreement, hereinafter referred to as IP, to avoid all forms of corruption or deceptive practice by following a system that is fair, transparent and free from any influence/unprejudiced dealings in the **bidding process**[1] and **contract administration**[2], with a view to:

2.1. Enabling the Employer to obtain the desired contract at a reasonable and competitive price in conformity to the defined specifications of the works or goods or services; and

2.2. Enabling bidders to abstain from bribing or any corrupt practice in order to secure the contract by providing assurance to them that their competitors will also refrain from bribing and other corrupt practices.

3. Scope:

The validity of this IP shall cover the bidding process and contract administration period.

4. Commitments of the Employer:

The Employer Commits itself to the following: -

4.1. The Employer hereby undertakes that no officials of the Employer, connected directly or indirectly with the contract, will demand, take a promise for or accept, directly or through intermediaries, any bribe, consideration, gift, reward, favor or any material or immaterial benefit or any other advantage from the Bidder, either for themselves or for any person, organization or third party related to the contract in exchange for an advantage in the bidding process and contract administration.

4.2. The Employer further confirms that its officials shall not favor any prospective bidder in any form that could afford an undue advantage to that particular bidder in the bidding process and contract administration and will treat all Bidders alike.

[1] Bidding process, for the purpose of this IP, shall mean the procedures covering tendering process starting from bid preparation, bid submission, bid processing, and bid evaluation.

[2] Contract administration, for the purpose of this IP, shall mean contract award, contract implementation, un-authorized sub-contracting and contract handing/taking over.



4.3. Officials of the Employer, who may have observed or noticed or have reasonable suspicion shall report to the head of the employing agency or an appropriate government office any violation or attempted violation of clauses 4.1 and 4.2.

4.4. Following report on violation of clauses 4.1 and 4.2 by official (s), through any source, necessary disciplinary proceedings, or any other action as deemed fit, including criminal proceedings shall be initiated by the Employer and such a person shall be debarred from further dealings related to the bidding process and contract administration.

5. **Commitments of Bidders**

The Bidder commits himself/herself to take all measures necessary to prevent corrupt practices, unfair means and illegal activities during any stage of the bidding process and contract administration in order to secure the contract or in furtherance to secure it and in particular commits himself/herself to the following:

5.1. The Bidder shall not offer, directly or through intermediaries, any bribe, gift, consideration, reward, favor, any material or immaterial benefit or other advantage, commission, fees, brokerage or inducement to any official of the Employer, connected directly or indirectly with the bidding process and contract administration, or to any person, organization or third party related to the contract in exchange for any advantage in the bidding process and contract administration.

5.2. The Bidder shall not collude with other parties interested in the contract to manipulate in whatsoever form or manner, the bidding process and contract administration.

5.3. If the bidder(s) have observed or noticed or have reasonable suspicion that the provisions of the IP have been violated by the procuring agency or other bidders, the bidder shall report such violations to the head of the procuring agency.

6. Sanctions for Violation:

The breach of any of the aforesaid provisions shall result in administrative charges or penal actions as per the relevant rules and laws.

6.1. The breach of the IP or commission of any offence (forgery, providing false information, mis-representation, providing false/fake documents, bid rigging, bid steering or coercion) by the Bidder, or any one employed by him, or acting on his/her behalf (whether with or without the knowledge of the Bidder), shall be dealt with as per the terms and conditions of the contract and other provisions of the relevant laws, including De-barment Rules.

6.2. The breach of the IP or commission of any offence by the officials of the procuring agency shall be dealt with as per the rules and laws of the land in vogue.

7. Monitoring and Administration:

7.1. The respective procuring agency shall be responsible for administration and monitoring of the IP as per the relevant laws.

7.2. The bidder shall have the right to appeal as per the arbitration mechanism contained in the relevant rules.

We, hereby declare that we have read and understood the clauses of this agreement and shall abide by it.



The parties hereby sign this Integrity Pact at *(place)* ***Theimphu*** on *(date)* _____





EMPLOYER

CID:

1	1	5	0	6	0	0	6	2	2	6

BIDDER/REPRESENTATIVE

CID:

Witness:

Name: Biwash Gurung

CID:

1	1	3	0	3	0	0	1	0	4	2

Witness:

Name:

CID:

Projects & Contract Department
DGPC
BHUTAN
Contracts Section

Form 4: Bidder's Information Form

[The Bidder shall fill in this Form in accordance with the instructions indicated below. No alterations to its format shall be permitted and no substitutions shall be accepted.]

Date: .....*[insert date of Bid submission]* .....

NIT No.: .....

1.	Bidder's Legal Name:
2.	Equity Shareholding by the Bhutan Nationals in the Bidder: and in case of joint venture equity shareholding by the Bhutanese nationals in all the members with Bhutanese nationality
3.	In the case of a Joint Venture (JV) legal name of each member of the Joint Venture:
4.	Bidder's or each member of JV's Country of Registration:
5.	Bidder's or Each member of JV's Year of Registration:
6.	Bidder's or Each member of JV's Legal Address in Country of Registration:
7.	Bidder's or Lead member of JV's Local Address in Bhutan (if any):
8.	Bidder's or Each member of JV's Website Address:
9.	Bidder's or Each member of JV's Business Activities:
10.	Bidder's or Lead member of JV's Authorized Representative Name: Designation: Address: Telephone/Fax numbers: E-mail Address:

Projects & Contract Department
DGPC
BHUTAN
Contracts Section

11.	Bidder's or Lead member of JV's Authorized Representative in Bhutan (if any) Name of the company or firm: Name of the contact person: Designation: Address: Telephone/Fax numbers: E-mail Address: Services to be provided by the local representative:
12.	Status of the Bidder (check the box as applicable): ☐ Bidding Company ☐ Lead Member of the Joint Venture ☐ Agent of the Foreign Bidder
13.	Attached are copies of the following original documents: *[check the box(es) of the attached original documents]* ☐ Tax Clearance Certificate of Bidder named in 1or 2 above (applicable for Bhutanese Bidders) or any other document to prove that the Bidder is tax compliant in the country of its registration (applicable for foreign bidders) ☐ Certificate of registration from the Construction Development Board (applicable for Bhutanese Bidders) ☐ Trade License (applicable for Bhutanese Bidder) ☐ Equity shareholding certificate of the Bidder ☐ Certificate of Incorporation or Registration of Bidder named in 1or 2 above ☐ Any other certificate to support the legal entity of the Bidder named in 1or 2 above

Date :

Place :

Signature.....

Name.....

Designation.....

Seal.....



Form 5: Power of Attorney

KNOW ALL MEN BY THESE PRESENTS THAT WE, ……*[insert name of the Bidder]*……. a Company incorporated under the ……*[insert relevant statute of the country of incorporation]*……. and having its registered office at ……*[insert address]*……. (hereinafter referred to as the "Bidder") having been authorized by the Board of Directors of the Company, inter alia, to execute contracts in the name of and for and on behalf of the Company. I …….*[insert nameof the person giving the power of attorney]*…….presently holding the position of …….. *[insert designation of the person giving the power of attorney]*…… in the company do hereby constitute, appoint and authorize Mr.…… [*insert name, designation and residential address of the person to whom the power of attorney is being given]*…… as our true and lawful attorney to do in our name and on our behalf all such acts, deeds, things necessary and incidental for submission of our Bid against NIT No. ……., floated by DGPC. I hereby further authorize the above attorney for signing and submission of the Bid and all other documents, information related to the Bid including undertakings, letters, certificates, declarations, clarifications, acceptances, guarantees, any amendments to the Bid and such documents related to the Bid, and providing responses and representing us in all the matters before DGPC in connection with the Bid for the said NIT till the completion of the bidding process including signing of the contract.

I accordingly hereby nominate, constitute and appoint above named …… severally, as my lawful attorney to do all or any of the acts specifically mentioned immediately herein above.

WE do hereby agree and undertake to ratify and confirm whatever the said Attorney shall lawfully do or cause to be done under and by virtue of this power of Attorney and the Acts of Attorney to all intents and purposes are done as if I had done the same on behalf of the Company if these presents had not been made.

IN WITNESS whereof I, …….. have executed these presents this the ……day of ……at ……...

EXECUTANT

Signature:…….

Name:.....

Designation:....……..……...

ACCEPTED:

Signature of Attorney:..…….

Name:.....……

Designation:…….....……..

Signature of the Attorney Attested

……

EXECUTANT

Name……

Designation……

Office Seal……

Note: The Power of Attorney should be notarised as per applicable legal provisions in the country of the Bidder

Form 6: Information for Meeting Qualification Requirement (QR)

NIT No.:.....

Bidder's Name & Address:

.....

To

[DGPC's Name and Address]

Dear Sir/Madam,

We seek qualification under ITB. 18 and BDS

SECTION III – BID DATA SHEET and our qualification data in support thereof is enclosed in the following Forms:

1.	Form 6A	:	Financial Details of Bidder
2.	Form 6B	:	Details of Financial Capacity Status
3.	Form 6C	:	Present order book position
4.	Form 6D	:	Past Performance Data
5.	Form 6E	:	Data regarding Key Personnel
6.	Form 6F	:	Brief write up regarding Construction Methodology &Project Management

We further understand and agree that any misleading or false information furnishedby us may result in summary rejection of our Bid.



Date :

Place :

Signature.....

Name.....

Designation.....

Seal.....

Note: The Bidder shall enclose relevant documents like copies of authenticated letter of awards, contracts, completion certificates etc. supporting the data and details provided in the Form 6A to 6F. In support of the financial information the audited accounts of the completed financial years shall be provided.

Projects & Contract Department
DGPC
BHUTAN
Contracts Section

Form 6A: Financial Details of Bidder

(1- Annual Turnover)

(May be modified as per the requirements specified in the BDS)

Bidder's Name & Address:..... NIT No.:.....

To

[DGPC's Name and Address]

Dear Sir/Madam,

To satisfy the requirements stipulated in the Bidding Documents, we provide the following details.

We confirm that our average annual turnover during the preceding *[Insert no. of years]* financial years as on date of Bid opening is not less than ……*[insert the amount as per NIT]*……. In support of above, we are enclosing ……*[Balance Sheets and Profit & Loss Account duly certified by the statutory auditors, or Income Tax Return duly acknowledged by the tax department, or any other documents to be inserted as applicable]*……...

S No	Particulars	Bidders home currency	Exchange rate used	Amount in USD
1.	Financial Year: 20.. – 20…			
2.	Financial Year: 20.. – 20…			
3.	Financial Year: 20.. – 20…			
4.	Average Annual Turnover for the preceding*[Insert no. of years]* () Financial Years as on date of Bid Opening.			
5.	We have enclosed [Balance Sheets and Profit & Loss Account certified by the statutory auditors/ Income Tax Return duly acknowledged by the tax department] for the above mentioned financial years	Yes/No		

Date : Signature.....

Place : Name.....

Designation.....

Seal.....

Note:

i. *If the accounting currency of the Bidder is other than USD, they will convert their figures of Annual Turnover at the TT selling exchange rate as at the end of the respective financial year or the last available exchange rate for that financial year announced by the Royal Monetary Authority of (RMA) the Kingdom of Bhutan (www.rma.org.bt), or, in absence of such exchange rate, the Bidder shall adopt the exchange rate announced by the Central Bank of their respective country, and furnish the details of calculations.*

ii. *Other income shall not be considered for calculation of Annual Turnover.*



(2- Net worth)

Bidder's Name & Address:..... NIT No.:.....

To

[DGPC's Name and Address]

Dear Sir/Madam,

To satisfy the requirements stipulated in the Bidding Documents, we provide the following details.

We hereby confirm that net worth of our company as on the last day of the preceding financial year is not less than …….*[indicate in %]* ….of its paid-up share capital.

The Details are as under:

S.No	Description	As on last day of the preceding financial year (USD/NU)
1	Paid-up share capital	
2	Net Worth	
3	% of Net Worth to paid-up Share Capital	
4	Documentary evidence like Audited financial statementsfor the last preceding financialyear or in case Audited results forthe last Financial Yearis not availablecertification of financial statementsfrom a practicing Chartered Accountantetc. in support of above is enclosed at Appendix..... to this Form 6A	

Date : Signature.....

Place : Name.....

Designation.....

Seal.....

Note:

- *Net worth shall be defined as:*
  = Paid up share capital
  Add: Reserves net of losses
  Subtract: Revaluation reserves
  Subtract: Intangible Assets
  Subtract: Miscellaneous expenditures to the extent not written off
- *If the accounting currency of the Bidder is other than USD, they will convert relevant figures at the TT selling exchange rate as at the end of the relevant financial year or the last available exchange rate for that financial year announced by the Royal Monetary Authority of (RMA) the Kingdom of Bhutan (www.rma.org.bt), or, in absence of such exchange rate, the Bidder shall adopt the exchange rate announced by the Central Bank of their respective country, and furnish the details of calculations.*



(3- Line of Credit) – Not Applicable

Bidder's Name & Address:..... NIT No.:.....

To

[DGPC's Name and Address]

Dear Sir/Madam,

To satisfy the requirements stipulated in the Bidding Documents, we provide the following details.

We hereby confirm that unutilised line of credit for fund based and non fund based limits with cash & bank balances including fixed deposits of our company, duly certified by the bankers as on a date not earlier than fifteen (15) days prior to the date of bid opening, is not less than USD…….....

We are also enclosing an original letter of authority to seek reference from our banks.

The details are as under:

S. No	Description	Amount in USD/NU, 15 days prior to the date of bid opening
1	Sanctioned Line of credit Bank Guarantees Cash credit Letter of credit	
2	Utilised Line of credit Bank Guarantees Cash credit Letter of credit	
3	Unutilised Line of credit Bank Guarantees Cash credit Letter of credit	
4	Certificate from the Bankers inrespect of unutilised Line of creditas above is enclosed at Appendix.....to this Form 6A	

Date :

Place :

Signature.....

Name.....

Designation.....

Seal.....

Note:

- *If the accounting currency of the Bidder is other than USD, they will convert their figures of Annual Turnover at the TT selling exchange rate as at the end of the respective financial year or the last available exchange rate announced by the Royal Monetary Authority of (RMA) the Kingdom of Bhutan (www.rma.org.bt), or, in absence of such exchange rate, the Bidder shall adopt the exchange rate announced by the Central Bank of their respective country, and furnish the details of calculations.*
- *In case certificates from more than one bank are submitted, the certified unutilized limit shall be of the same date from all such banks.*

- *If the unutilised limits are in currency other than USD, the same shall be converted to USD at the exchange rate as on fifteen (15) days prior to the date of bid opening.*

Projects & Contract Department
DGPC
BHUTAN
Contracts Section

(4- Comfort Letter) – Not Applicable

Bidder's Name & Address:..... NIT No.:.....

To

[DGPC's Name and Address]

Dear Sir/Madam,

Since the unutilised line of credit for fund based and non-fund based limits together with cash and bank balances including Fixed Deposits of our Company are not meeting the requirements of BDS a comfort letter from our Bankers unequivocally stating that in case the Bidder is awarded the Contract, the Bank would enhance Line of Credit for fund based and non-fund based limits to a level not less than the specified amounts, to us is enclosed at Appendix..... to this Form - 6A.

We further confirm that notwithstanding anything stated above, DGPC reserves the right to assess our/ our subsidiaries / group companies' capabilities and capacity to perform the Contract, should the circumstances so warrant in the overall interest of DGPC in line with QR requirement specified in the BDS.

Date : Signature.....

Place : Name.....

Designation.....

Seal.....

Note:

- *Comfort letter shall be from one of the banks listed in BDS.*

Form 6B: Details of Financial Capacity Status: Not Applicable

(May be modified as per the requirements specified in the BDS)

Bidder's Name & Address:..... NIT No.:.....

To

[DGPC's Name and Address]

A	Orders in Hand	
i	Total value of Contracts	
ii	Value of work completed out of above value Up to ……	
iii	Value of anticipated work to be done in the following …….Financial Years out of (i) above : a) ..... b) ..... c)	
B	Bidder's assessment of maximum negative cash flow (fund requirement) at any point of time between Letter of Award and completion of Contract based on specified terms of payment and his expenditure plan for materials and equipments being offered by Bidder for this Works.	
C	Arrangement to meet the above fund requirement.	Own Funds Credit Others Total
D	Declaration by Bankers regarding:	
	i) Bank Guarantee Limits Sanctioned and unutilised as on (a date not later than 15 days prior to date of bid opening).	Letter from Bank Enclosed at Appendix....
	ii) Over Draft Limits/Cash Credit Limits – Sanctioned and un-utilised as on (a date not later than 15 days prior to date of bid opening).	Letter from bank Enclosed at Appendix.....
	iii) Deferred payment limits	
	iv) Cash and Bank Balances including Fixed Deposits	
	v) Movable Property Hypothecation. (Please state the present utilisation status also	
	vi) Information regarding any current litigation in which the Bidder is involved, the parties concerned, the disputes and the disputed amount if any.	

Date :

Place :

Signature.....

Name.....

Designation.....

Seal.....

The information should be supported by a letter from the Bank

Note:

- *All figures, to be stated in USD for Foreign Bidder. The Bidder will convert figures if in currency other than USD at the TT selling exchange rate as at the end of the respective financial year or the last available exchange rate for the respective financial year announced by the Royal Monetary Authority of (RMA) the Kingdom of Bhutan (www.rma.org.bt), or, in absence of such exchange rate, the Bidder shall adopt the exchange rate announced by the Central Bank of their respective country, and furnish the details of calculations.*
- *Continuation sheets of like size and format, may be used and annexed to this Form if required.*

Projects & Contract Department
DGPC
BHUTAN
Contracts Section

Form 6C: Present Order Book Position : Not Applicable

Bidder's Name & Address:..... NIT No.:.....

To

[DGPC's Name and Address]

List of works under execution and their present status

S. No.	Owner/ Client (Name and address)	Project Name &Scope of Work	Order Value	Date of Order	Schedule Time of Completion	Value of Outstanding Work	Actual/ Expected Time of Completion	Reason for Delay (if any)

We hereby confirm that the information above is true and correct. We have not concealed any information and we understand that any wilful misstatement described above will lead to disqualification before award or termination of the Contract with all consequential losses to our account.

Date :

Place :

Signature.....

Name.....

Designation.....

Seal.....

Note:

- *Continuation sheets of like size and format, may be used and annexed to this Form if required.*
- *Relevant documents/LOA/Orders to be furnished to justify the data above.*
-

Form 6D: Past Performance Data: Not Applicable

Bidder's Name & Address:..... NIT No.:.....

To

[DGPC's Name and Address]

Details of similar Works in last .....*[insert number of years]*..... years

S. No.	Owner/ Client (Name and address)	Project Name &Scope of Work	Order Value	Date of Order	Schedule Completion Date	Actual/ Expected Completion Date	Reason for Delay (if any)

Date :

Place :

Signature.....

Name.....

Designation.....

Seal.....

Note:

- *Continuation sheets of like size and format, may be used and annexed to this Form if required.*
- *Relevant documents/LOA/Orders/Certificate from the client to be furnished to justify the data above.*
- *The details of similar works should be given atleast for those no of works as specified in the qualification requirements. Subsequent to submission of the bid no further details will be accepted.*

Form 6E: Data regarding Key Personnel

Bidder's Name & Address:..... NIT No.:.....

To

[DGPC's Name and Address]

The qualification and experience of key personnel proposed for administration and execution of the Contract at the Site are as follows:

S.No	Proposed Position	Name	Position Held since	Professional Qualification	Experience in relevant Field	Any other Information

Date :

Place :

Signature.....

Name.....

Designation.....

Seal.....

Note:

i. Please furnish the complete Site organization chart proposed to be set up for execution of the Contract.

ii. Continuation sheets of like size and format, may be used and annexed to this Form if required.

Projects & Contract Department DGPC BHUTAN Contracts Section

Form 6F: Brief write up regarding Construction Methodology and Project Management

Bidder's Name & Address:..... NIT No.:.....

To

[DGPC's Name and Address]

Dear Sir/Madam,

In line with ITB. 18, we furnish below the brief write up in support of our established project management organization and construction methodology to be adopted for the execution of the Work.

[The Bidder should attach bar charts for proposed planning and scheduling activities in respect of engineering, procurement of materials & construction equipments; their transportation to Site, proposed methodology & construction programme to comply with quality achievement requirements of the Works execution and fixing milestones for achieving completion targets.]

Date : Signature.....

Place : Name.....

Designation.....

Seal.....

Note: *Continuation sheets of like size and format, may be used and annexed to this Form if required.*

Form 7: Equipment/Machinery Deployment Schedule

Bidder's Name & Address:..... NIT No.:.....

To

[DGPC's Name and Address]

S. No.	Equipment Type/ Capacity	Minimum Nos Required as indicated in Technical Specification	No. Proposed to be Deployed	No. Already Available for Immediate Deployment	Period by which balance equipment will be deployed	Place from where balance equipment will be brought	No. intended to be purchased	Period by which new T&P can be deployed	Quantum of work that can be achieved during peak period/ shift

The above list of Equipments & Machinery indicates minimum requirements. However, we shall deploy any additional Equipments and Machinery, without any additional cost to DGPC, which may be required as per the directive of the Project Manager to execute the work satisfactorily and as per the time schedule stipulated

Date:

Place:

Signature.....

Name.....

Designation.....

Seal.....

Projects & Contract Department DGPC BHUTAN Contracts Section

Form 8: Details of proposed Subcontractors (Not Applicable)

NIT No.:.....
Bidder's Name & Address:
.....

To

[DGPC's Name and Address]

Dear Sir,

The details of all items of Works which we propose to sublet, giving detailsof the name and nationality of the proposed Subcontractor for eachitem, are given below:

S.No	Details of Works	Unit	Quantity	Name and Address of proposed Subcontractor	Nationality
1					
2					

Date :

Place :

(Signature).....

(Printed Name).....

(Designation).....

(Seal).....

Note:

1. Continuation Sheets of like size and format may be used as per Bidder's requirement and shall be annexed to this Form.
2. Bidder shall attach letters of confirmation from the Subcontractors so as to confirm their participation

Form 9: Affidavit/Self-declaration Regarding Eligibility of Bidders

I ……*[insert the name and designation of the signatory]*…….. the duly authorized representative of ……*[insert name of the Bidder]*…….. hereby confirm that I possess the legal authority to make this Affidavit/ Declaration on behalf of the Bidder.

I solemnly declare and affirm that to the best of my knowledge, information, and belief, the above Bidder:

a) Is not insolvent or is not in receivership or is not a bankrupt or is not in the process of being wound up, or has not entered into an arrangement with creditors;
b) Have not been found guilty of professional misconduct by any competent authority as per law;
c) Have fulfilled the obligations with regard to the payment of taxes, social security or other payments due in accordance with the laws of the country in which the Bidder is established or of the Kingdom of Bhutan;
d) Have not been declared by DGPC to be ineligible for participation in tenders on account of any fraud and/or corruption in competing or executing a Contract;
e) Have not been debarred from participation in any public procurement by any Competent Authority as per law.

Further, I also declare that the affairs of the Bidder are not being administered by a court, judicial officer or by an appointed liquidator; and the companyhas not suspended business or is not in any analogous situation arising from similar procedures under the laws and regulations of the country in which the Bidder is established or of the Kingdom of Bhutan.

Verified on this …… day of …….. of the year…….. that the particulars furnished above are true and correct to the best of my knowledge and belief and nothing in material have been concealed or misrepresented.

Date :

Place :

Signature.....

Name.....

Designation.....

Seal.....



Form 10: Form of Joint Venture Agreement (if applicable) – Not Applicable

(On non-judicial stamp paper of appropriate value to be purchased in the name of Lead Member of the Joint Venture)

THIS Joint Venture Agreement is executed on this ……..day of……. Two thousand and …….. between M/s……... a company incorporated under the laws of ……(*insert the name of country under the laws of which the company is incorporated for all the members)*……. and having its Registered Office at …… (hereinaftercalled the "Lead Member" which expression shall include its successors, executors andpermitted assigns), M/s……..a company incorporated under the …….. and having its Registered Office at……(hereinafter called the "Member" which expression shall include its successors, executorsand permitted assigns) and M/s…… a company incorporated under the ……..... and having its Registered Office at ……. .(hereinafter called the"Member" which expression shall include its successors, executors and permitted assigns) forthe purpose of making a Bid and entering into a Contract (in case of award) against the NIT No.: ……for procurement of ……..... by Druk Green Power Corporation Limited incorporated under the Companies Act of 2000 of the Kingdom of Bhutan having its Registered Office at …….which expression shall include its successors, executors and permitted assigns (hereinafter called DGPC).

WHEREAS the Bidding Documents stipulates that a Joint Venture of two or more firms as members, meeting the requirement of ITB. 8, as applicable may Bid, provided the Lead Member and other Members if so specified fulfils all technical qualification requirements listed for an individual Bidder and the financial qualification requirements is met jointly by all the members of the Joint Venture subject to the condition that each member meets atleast the minimum financial qualification requirements as specified in the Bidding Documents and in such a case, the Bid shall be signed by the Lead Member of the Joint Venture, who will be jointly and severally liable to perform the Contract and allobligations hereunder.

NOW THIS INDENTURE WITNESSETH AS UNDER:

In consideration of the above premises and agreements all the Members to this Joint Venturedo hereby now agree as follows:

1. In consideration of the award of the Contract by DGPCto the Joint Venture, we, the Members to the Joint Venture do hereby agree that M/s ……...shall act as Lead Member and further declare and confirm that we shall jointly and severally be bound unto DGPCfor the successful performance of the Contract and shall be fully responsible for the execution of the Works in accordance with the Contract.

2. The Lead Member is hereby authorized by the Members of the Joint Venture to bind the Joint Venture with respect to the Contract as may be awarded by DGPC and to receive instructions for and behalf of all the Members of the Joint Venture.

3. It is hereby agreed that the Lead Member shall furnish the Bid security as stipulated in the Bidding Documents on behalf of the Joint Venture.

4. In case of any breach of the said Contract by the Lead Member or other Member(s) of the Joint Venture agreement, the Member(s) do hereby agree to be fully responsible for the successful performance of the Contract and to carry out all the obligations and responsibilities under the Contract in accordance with the requirements of the Contract.

5. Further, if DGPCsuffers any loss or damage on account of any breach in the Contract the member(s) of these presents undertake to promptly make good such loss or damage caused to DGPC, on its demand without any demur. It shall not be necessary or obligatory for DGPCto proceed against Lead Member to these presentsbefore proceeding against or dealing with the other Member(s).



6. The financial liability of the member of this Joint Venture agreement to DGPC, with respect to any of the claims arising out of the performance or non- performance of the obligations set forth in the said Joint Venture agreement, read in conjunction with the relevant conditions of the Contract shall, however, not be limited in any way so as to restrict or limit the liabilities of any of the Members of the Joint Ventureagreement.

7. It is expressly understood and agreed between the members to this Joint Venture agreement that the responsibilities and obligations of each of the members shall be as delineated in Appendix-I *(*To be incorporated suitably by the members)* to this agreement. It is further agreed by the Members that the above sharing of responsibilities and obligations shall not in any way be a limitation of joint and severalresponsibilities of the members under this Contract.

8. It is clearly agreed that the Lead Member shall ensure performance under the Contract and if one or more of the members fail to perform its respective obligations under the Contract, the same shall be deemed to be a default of all the members of the Joint Venture.

9. It is hereby expressly agreed between that members to this Joint Venture that neither member shall assign or delegate its rights duties or obligations under this agreement except with the prior written consent of DGPC.

10. This Joint Venture agreement shall be construed and interpreted in accordance with the laws of the Kingdom of Bhutan and the courts of the Kingdom of Bhutan shall have the exclusive jurisdiction in all matters arising thereunder.

11. In case of an award of a Contract, we the members to the Joint Venture agreement do hereby agree that we shall be jointly and severally responsible for furnishing a Contract Performance Security from a bank in favour of DGPC in the forms acceptable to DGPCfor value of ten percent (10%) of the Contract Price. It is further agreed that the Joint Venture agreement shall be irrevocable and shall form an integral part of the Contract, and shall continue to be enforceable till completion of the Contract. It shall be effective from the date first mentioned above for all purposes and intents.

12. We undertake that the Joint Venture agreement shall not be modified or amended without the written permission from DGPC.

IN WITNESS WHEREOF, the Members to the Joint Venture agreement have through theirauthorised representatives executed these presents and affixed Common Seals of theircompanies, on the day, month and year first mentioned above.

1 For lead Member

(Signature of authorisedrepresentative)

Signature …….

Name ……..

Designation …….

Projects & Contract Department * DGPC BHUTAN * Contracts Section

2 For other Member

(Signature of authorisedrepresentative)

Signature …….

Name ……..

Designation …….

WITNESSES:

1..……	2. ……
(Signature)	(Signature)
Name …….	Name …….
Official Address.....	Official Address.....

Form 11A: Deviation from technical specifications Schedule

NIT No.:.....

Bidder's Name & Address:

.....

To

[DGPC's Name and Address]

The following are the deviations and variations from and exceptions to the terms, conditions and specifications of the Bidding Documents for procurement of…....*[insert brief description of works]*……... These deviations and variations are exhaustive. We are furnishing below the cost of withdrawal for the deviations and variations stated in this Form. We shall withdraw the deviations proposed by us in this Form at the cost of withdrawal indicated herein, failing which our Bid may be rejected and bid security forfeited.

We confirm that except for the deviations and variations stated in this Form to our Bid, the entire work shall be performed as per specifications and conditions of the Bidding Documents without any extra cost to DGPC, irrespective of any mention to the contrary anywhere else in the Bid, failing which our Bid may be rejected and Bid security forfeited.

Further, we agree that additional condition, deviation, if any, found in the Bidding Documents other than those stated in this Form, save those pertaining to any rebates offered, shall not be given effect to.

Section / Clause No	Page No.	Statement of Deviations

Date :

Place :

(Signature).....

(Printed Name).....

(Designation).....

(Seal).....

Note: Continuation sheets of like size and format may be used and annexed to this Form if required.

Form 11B: Deviation Schedule of Financial Bid

(The deviation mentioned in the schedule shall be the same deviation as mentioned in Form 11A and submitted along with technical bid. Additionally, only the cost of withdrawal, if any, shall be mentioned against each deviation)

NIT No.:.....

Bidder's Name & Address:

.....

To

[DGPC's Name and Address]

The following are the deviations and variations from and exceptions to the terms, conditions and specifications of the Bidding Documents for procurement of….....*[insert brief description of works]*……... These deviations and variations are exhaustive. We are furnishing below the cost of withdrawal for the deviations and variations stated in this Form. We shall withdraw the deviations proposed by us in this Form at the cost of withdrawal indicated herein, failing which our Bid may be rejected and bid security forfeited.

We confirm that except for the deviations and variations stated in this Form to our Bid, the entire work shall be performed as per specifications and conditions of the Bidding Documents without any extra cost to DGPC, irrespective of any mention to the contrary anywhere else in the Bid, failing which our Bid may be rejected and Bid security forfeited.

Further, we agree that additional condition, deviation, if any, found in the Bidding Documents other than those stated in this Form, save those pertaining to any rebates offered, shall not be given effect to.

Section / Clause No	Page No.	Statement of Deviations	Cost of withdrawal

Date :

Place :

(Signature).....

(Printed Name).....

(Designation).....

(Seal).....

Note: Continuation sheets of like size and format may be used and annexed to this Form if required.

Projects & Contract Department
DGPC
BHUTAN
Contracts Section

Form 12: Details in respect of local representation: Not Applicable

NIT No.:.....

Bidder's Name & Address:

.....

To

[DGPC's Name and Address]

Dear Sir,

We furnish below the following information in respect of our local agent:

(i) Name and address of the local agent

……
……
……
……..

(ii) Services to be rendered by the local agent

……
……
……
……

(iii) Remuneration to be paid to the local agent (included in the Bid Price) [*The currency of payment to local agent shall be Nu only subject to no variation .]*

……
……
……
……

Date :

Place :

(Signature).....

(Printed Name).....

(Designation).....

(Seal).....

Projects & Contract Department
DGPC
BHUTAN
Contracts Section

Form 13: Quality Assurance Program

NIT No.:.....

Bidder's Name & Address:

.....

To

[DGPC's Name and Address]

Dear Sir,

We hereby provide the necessary information on Quality Assurance Programme containingthe overall Quality Management and procedures, which we propose to followduring various phases of execution of the Contract. We hereby confirm that the program provided herein is in compliance with the requirements specified in the Technical Specifications.

Date :

Place :

(Signature).....

(Printed Name).....

(Designation).....

(Seal).....

Note: Continuation Sheets of like size and format may be used as per Bidder'srequirement and shall be annexed to this Form



Form 14: Performance Evaluation System Acceptance

To

[DGPC's Name and Address]

Dear Sir/Madam,

With reference to our Bid dated.....for.....*[insert name of work]*.....against NIT No....., we hereby conform that we have read the provisions in Section VIII regarding the performance evaluation system and we hereby agree to abide by the provisions in the chapter on performance evaluation or do affirm as follows:

1. We agree to abide by all the provisions on performance evaluation of works.

2. If our bid is accepted, we agree to be assessed as per the performance evaluation rating methodology adopted by DGPC.

3. We accept the rating depending on our performance and any action thereof.

4. We shall be liable for any breach of this undertaking and non-compliance to the provisions of performance evaluation system.

Sealed and signed



Form 15: Additional Information (If any)

NIT No.:.....

Bidder's Name & Address:

.....

To

[DGPC's Name and Address]

Dear Sirs,

S.No	Description of Information	Reference to Bidding Documents	Reference to Bid

Date :

Place :

Signature.....

Name.....

Designation.....

Seal.....

Note: *Continuation sheets of like size and format may be used as per Bidders requirements and shall be annexed to this Form.*

Projects & Contract Department
DGPC
BHUTAN
Contracts Section

Form 16A: Bid Submission Form for Technical Bid

(To be submitted on Bidder's letter head)

Name and Description of Works: .....

.....

.....

To NIT No.:.....

[DGPC's Name and Address]

Dear Sir,

1) With reference to your invitation for Bids, I/We have examined the bidding documents, including addenda(s) and clarifications (if any), the receipt of which is hereby acknowledged for the above named Works and understood their contents.

   I/We, hereby submit my/our offer to execute the Works described above in conformity with the General Conditions of Contract, Technical Specifications, Special Conditions of Contract and Addenda(s)/clarifications (if any) accompanying this Bid for the Contract Price as mentioned in the Price Bid.

   a. We are aware that the Bill of Quantities do not generally give a full description of the work to be performed under each item and we shall be deemed to have read the Technical Specifications and other bidding documents and Drawings to ascertain the full scope of work included in each item while filling-in the rates and prices. We agree that the entered rates and prices shall be deemed to include for the full scope as aforesaid, including overheads and profit.

   b. We declare that as specified in the General Conditions of Contract, the rates of Bill of Quantities shall be subject to adjustment.

   c. We understand that the arithmetical errors in the Bill of Quantities shall be corrected as per provisions of the ITB.

2) All information provided in my/our offer and attachments (in all the three envelopes, viz. Envelope I, Envelope II and Envelope III) thereof is true and correct and in line with the requirement of the bidding documents and all documents accompanying this offer are true copies of their respective originals.

3) I/We confirm our prices are inclusive of all the applicable taxes, duties, levies, royalties and octroi for the performance of the Contract.

4) We hereby confirm that this Bid submission complies with the Bid Validity and Earnest Money Deposit required to be submitted in the form of ..... for a sum of ..... *[Name of currency and amounts in figures and words]*

5) I/We hereby declare that only the persons or firms interested in this proposal as principals are named here and that no other persons or company other than those mentioned herein have any interest in this Bid submission or in the Contract to be entered into and in good faith, without collusion or fraud, if the award is made on me/us.



I/We hereby also declare that any of the person or party (including my/our Subcontractor listed in the Bid) have not been declared ineligible to Bid for corrupt or fraudulent or collusive or coercive practice or banned from business dealings on any consideration by DGPC or any other government institutions/undertakings in Bhutan.

I/We also undertake that, in competing for (and, if the award is made to us, in executing) the above Contract, we will strictly observe the laws against fraud and corruption in force in Bhutan.

6) In line with the requirements of the bidding documents, we enclose herewith our Bid to execute the Works and remedy any defects therein, in conformity with such documents.

7) I/We undertake, if our bid is accepted, to commence the work from the date as may be stated in your Letter of Award to us, and to achieve completion of works within the time stated in the bidding documents.

8) We confirm that the ITB and GCC have been read carefully and understood the obligations of the Contractor fully and agree to comply with all the clauses which are mentioned therein. In case of any breach of any condition on our part, we shall be liable for actions as per terms and conditions of the Contract including rejection of bid and termination of Contract, if awarded.

9) If my/our Bid is accepted, I/We undertake to provide a Contract Performance Security, and Advance Payment Security in the form and amounts, and within the time specified in the bidding documents.

10) I/We agree to abide by this Bid for a period of .....*[insert Bid Validity]*..... from the date fixed for submission of Bids as stipulated in the bidding documents, and it shall remain binding upon me/us and may be accepted by you at any time before the expiration of that period.

11) Until a formal Contract Agreement is prepared and executed between us, this Bid, together with your written acceptance thereof in the form of your Letter of Award and our unconditional acceptance of the Letter of Award shall constitute a binding Contract between us.

12) I/We understand that you are not bound to accept the lowest or any Bid you may receive.

We attach herewith the documents and information set to be furnished to you for evaluating our eligibility and Bid.

Yours faithfully,

Date :

Place :

Signature.....

Name.....

Designation.....

Seal.....

Projects & Contract Department
DGPC
BHUTAN
Contracts Section

Form 16B: Bid Submission Form for Financial Bid

(To be submitted on Bidder's letter head)

Name and Description of Works: .....

.....

.....

To NIT No.:.....

[DGPC's Name and Address]

Dear Sir,

Having examined the Bidding Document (with reference to ITB. 10), including addenda *[insert list]*, we offer to execute the *[name and identification number of Contract]* in accordance with the Conditions of Contract accompanying this Bid for the Contract Price of .....*[insert amount in numbers]*, *[insert amount in words] [insert name of currency]*.

This Bid and your written acceptance of it shall constitute a binding Contract between us. We understand that you are not bound to accept the lowest or any Bid you receive.

We hereby confirm that this Bid complies with the Bid validity and Bid Security required by the Bidding Document and specified in the Bidding Data Sheet.

In case if I withdraw my bid after opening for whatsoever reasons, *I agree to the* forfeiture of the EMD/Bid Security.

Authorized Signature: ___

(Affix Legal Stamp)

Name and Title of Signatory: _____

Name of Bidder: _____

Address: _____

Projects & Contract Department DGPC BHUTAN Contracts Section

Form 17A: Bill of Quantities

SN	Description of Activities	Dimension and Scale	Unit	Qty	Drone-based Survey	
					Rate (BTN/INR/USD)	Amount (BTN/INR/USD)
1	Control Survey & Establishment of Permanent Control Points	Dimension: 30 cm x 30 cm x 70 cm	Nos	12		
2	Topographical Survey and Mapping of whole project layout using high resolution satellite image	Scale: 1:5,000 CI:5 m	sq.km	55.519		
3	Topographical survey and mapping of Powerhouse (Minjey SPH & UGPH and Phawan UGPH)	Scale: 1:1,000 CI:1 m	sq.km	4.212		
4	Longitudinal Profile	Horizontal 1:10,000, Vertical 1:100	Nos	457		
5	River Cross-sections	Horizontal 1:10,000, Vertical 1:100	Nos	239		
Total (BTN/INR/USD)						
GST (5%)						
Grand Total						

Total Amount in words:

Projects & Contract Department DGPC BHUTAN Contracts Section

Form 17B: Bill of Quantities (Foreign currency) – Not Applicable

To be quoted either in US Dollar

Item No.	*Description*	*Unit*	*Quantity*	*Unit Rate*		*Amount*
				In figures	*In Words*	

Note: This form is not applicable for this Contract.

Projects & Contract Department
DGPC
BHUTAN
Contracts Section

SECTION VIIB - CONTRACT FORMS

(Form No. 18 to Form No. 23)

Applicable Forms from this Contract Forms section willeither be submitted by the successful Bidder or by DGPC, post award of Contract.

Form 18: Letter of Award of Contract

Reference No. .....

Date.....

To
[Name and Address of the Contractor]

Dear Sirs,

This is to notify you that your Bid dated..... for execution of the .....

..... *[Name of the Contract and Tender No., as given in ITB]* for the Contract Price of ..... *[Name of the currency and amount in words and figures as corrected and modified in accordance with the ITB]* is hereby accepted by DGPC.

You are hereby requested to furnish Contract Performance Security, in the form detailed in GCC.18 for an amount of .....*[insert amount of performance security]*..... within fifteen (15) days of the receipt of this Letter of Award and the validity of the Contract Performance Security shall be up to .....*[insert validity]*.....

Failure to submit the Contract Performance Security within the period stipulated above shall constitute a ground for the annulment of the award and entail forfeiture of Bid Security.

This letter is being issued to you in duplicate. Please retain one copy for your records and return the other copy to DGPC after recording on the letter "Accepted Unconditionally" under the signature of the authorised signatory.

Please acknowledge receipt.

Yours faithfully,

Signature

[Name and title of signatory]

[DGPC's address]



Form 19: Contract Agreement

(ON APPROPRIATE VALUE OF LEGAL STAMP)

This agreement is made on this _____ (day, month, year) by and between Druk Green Power Corporation Ltd. , a Company registered under _____(insert the relevant statutory act under which the company was incorporated)_____ and having its Registered Office at _____ (Address of DGPC) (hereinafter referred to as "DGPC") which expression shall unless repugnant to the context or meaning thereof include its successors and assigns of the one part

AND

_____(Name of Contractor or Joint Venture), a Company registered & and existing under the laws of _____ (Name of Country and Registration details) and having its registered office at _____ (please enter the Addresses of the Contractor or each of the Partners in case of Joint Venture) _____ _____ (hereinafter to be collectively referred to for the sake of convenience as "the Contractor") which expression shall unless repugnant to the context or meaning thereof include their respective successors and permitted assigns of the other part.

Whereas DGPC is desirous that the Contractor executes the Contract No. _____ _____ (name and identification number of the Contract) for ----------(hereinafter called the "Works") and DGPC has accepted the Bid submitted by the Contractor for the execution and completion of such Works and the remedying of any defects therein, at a Contract Price of _____ (Name of currency and value in words and figures).

NOW THIS AGREEMENT WITNESSETH as follows:

1. In this Agreement, words and expression shall assume the same meanings as are respectively assigned to them in the General Conditions of Contract hereinafter referred to and they shall be deemed to form and be read and construed as part of this Agreement.

2. In consideration of the payments to be made by DGPC to the Contractor as hereinafter mentioned, the Contractor hereby covenants with DGPC to execute and complete the Works and remedy the defects therein in conformity in all aspects with the provisions of Contract and shall not in any manner dilute the responsibilities, obligations and liabilities as defined in the said Contract to ensure completion and performance of the Works within the Time for Completion (in case of Joint Venture, the respective responsibilities, obligations, and liabilities of each of the partners of the Joint Venture as well as of the Leader of the JV in respect of execution shall be performed as laid under "The Joint And Several Responsibility And Liability Provisions" therein under the Contract).

3. DGPC hereby covenants to pay the Contractor in consideration of the execution and completion of the Works and in the remedying the defects therein the Contract Price or such other sum as may become payable under the provisions



of the Contract at the times and in the manner prescribed by the Contract.

4. The following documents shall be deemed to form and be read and construed as part of this Agreement:

i. Contract Agreement
ii. Letter of Acceptance
iii. Special Conditions of Contract
iv. General Conditions of Contract
v. Bill of Quantities
vi. Technical Specifications
vii. Drawings
viii. Contractor's Bid
ix. Any other documents listed in the SCC as forming part of the Contract.

In witness whereof, the parties have caused this Agreement to be executed on the day, month, and year first written before.
The Common Seal of both the Parties is hereunto affixed in the presence of:

Signed Sealed and Delivered by the said Parties.

(Signature)
(Name and Title of Signatory)
(Name of Employer)

(Signature)
(Name and Title of Signatory)
(Name of Contractor)

In the presence of:
WITNESSES:

1. (Signature)
(Name & Address)

2. (Signature)
(Name & Address)

Projects & Contract Department
DGPC
BHUTAN
Contracts Section

Form 20: Bank Guarantee for Contract Performance Security

[To be provided on the relevant legal document, as per applicable law, in the country of execution]

Bank Guarantee No. .....

Date.....

To
[DGPC's Address]

Dear Sir/Madam,

In consideration of Druk Green Power Corporation Limited (hereinafter referred to as DGPC which expression shall unless repugnant to the context or meaning thereof include its successors, administrators and assigns) having awarded to M/s …… with its Registered/Head Office at ……(hereinafter referred to as the 'Contractor' which expression shall unless repugnant to the context or meaning thereof, include its successors, administrators, executors and assigns), a Contract by issue of Letter of Award No…….. dated …….. valued at .....*[name of currency and amount in figures and words]*....., for …….. *(insert Scope of Contract)*…… and the Contractor having agreed to provide a Contract Performance Guarantee for the faithful performance of the entire Contract equivalent to ten percent (10%) of the said value of the Contract to DGPC.

We …….. *(insert Name and Address of the bank issuing the Guarantee)*……. having its Head Office at …….. hereinafter referred to as the 'Bank' which expression shall, unless repugnant to the context or meaning thereof include its successors, administrators, executors and assigns), do hereby guarantee and undertake to pay DGPC, on demand any and all monies payable by the Contractor to the extent of …….*[insert amount of the Bank Guarantee and its currency]*…….. at any time upto …….@.....(day/month/year) without any demur, reservation, contest recourse or protest and or without any reference to the Contractor. Any such demand made by DGPC on the Bank shall be conclusive and binding notwithstanding any difference between DGPC and the Contractor or any dispute pending before any Court, Tribunal or any other Authority. The Bank undertakes not to revoke this guarantee during its currency without prior consent of DGPC.

DGPC shall have the fullest liberty without affecting in any way the liability of the Bank under this guarantee from time to time to extend the time for performance of the Contract by the Contractor. DGPC, shall have the fullest liberty, without affecting this guarantee to postpone from time to time the exercise of any powers vested in DGPC or of any right which they might have against the Contractor and to exercise the same at any time and any manner, and either to enforce or to forbear to enforce any covenants, contained or implied in the Contract between DGPC and the Contractor or any other course of remedy or security available to DGPC. The Bank shall not be released of its obligations under these presents by any exercise by DGPC of its liberty with reference to the matters aforesaid or any of them or by reason or any other acts of omission or commission on the part of DGPC or any other indulgence shown by DGPC or by any other matter or thing whatsoever which under the law would but for this provisions have the effect of relieving the Bank.

The Bank also agrees that DGPC at its option shall be entitled to enforce this guarantee against the Bank as a Principal debtor, in the first instance without proceeding against the Contractor and notwithstanding any security or other guarantee that DGPC may have in relation to the Contractor's liabilities.

Notwithstanding anything contained herein above, our liability under this guarantee is restricted to …… and shall remain in force up to and including …… and shall be extended from time to time for such period, as may be desired by M/s ……. on whose behalf this guarantee has been given.

Projects & Contract Department DGPC BHUTAN Contracts Section

All rights of DGPC under this guarantee shall be forfeited and the Bank shall be relieved and discharged from all liabilities after the above-mentioned date or from the extended date.

Dated this ……day of …….20 …… at …….

Witness:

……	……
(Signature)	(Signature)
……	……
(Name)	(Name)
……	……
(Official Address)	(Official Address)

Authorized vide

Power of Attorney No:…….

Date…….

Note:	(@) This date will be thirty (30) days beyond the scheduled end of completion period (#) Complete mailing address of the Head Office of the Bank to be given

Form 21: Bank Guarantee for Advance Payment

[To be provided on the relevant legal document, as per applicable law, in the country of execution]

Bank Guarantee No. .....

Date.....

To
[DGPC's address]

Dear Sir/Madam,

In consideration of the Druk Green Power Corporation Limited (hereinafter referred to as DGPC) which expression shall unless repugnant to the context or meaning thereof include its successors, administrators, executors and assigns having awarded to M/s..... with its registered/Head Office at ..... (here-in-after referred to as the Contractor) which expression shall unless repugnant to the context or meaning thereof, include its successors, administrators, executors and assigns, a Contract by issue of DGPC's Letter of Award No. ……. dated ……. and the same having been unequivocally accepted by the Contractor resulting in a 'Contract', dated …… valued at …….....*[name of currency and amount in figures and words]*…….for ……*(insert Scope of Contract)*……. (hereinafter called the Contract) and DGPC having agreed to make advance payment to the Contractor for performance of the above Contract amounting to.....*[insert currency and amount of the advance]*....., as an advance against Bank Guarantee to be furnished by the Contractor.

We, …….*[Insert name and address of the bank issuing Branch]* …….. having its Head Office at …….. (hereinafter referred to as the 'Bank' which expression shall, unless repugnant to the context of meaning thereof, include its successors, administrators, executors and assigns) do hereby guarantee and undertake to pay DGPC immediately on demand any or all monies payable by the Contractor to the extent of …….*[insert currency and amount of the advance]*…….at any time up to …….@……..without any demur, reservation, contest, recourse or protest and/or without any reference to the Contractor. Any such demand made by DGPC on the Bank shall be conclusive and binding not withstanding any difference between DGPC and theContractor or any dispute pending before any Court, Tribunal, Arbitrator or any other Authority.

DGPC shall have the fullest liberty without affecting in any way the liability of the Bank under this guarantee from time to time to vary the advance or to extend the time for performance of the Contract by the Contractor.DGPC shall have the fullest liberty, without affecting this guarantee to postpone from time to time the exercise of any powers vested in them or of any right which they might have against the Contractor and to exercise the same at any time in any manner and either to enforce or to forbear to enforce any covenants contained or implied in the Contract between DGPC and the Contractor or any other course or remedy or security available to DGPC. The Bank shall not be released of its obligations under these presents by any exercise by DGPCof its liberty with reference to the matters aforesaid or any of them or by reason of any other act or forbearance or other acts of omission or commission on the part of DGPCor any other indulgence shown by DGPC or by any other matter or thing whatsoever which under law would, but for this provision, have the effect of relieving the Bank.

The Bank also agrees that DGPC at its option shall be entitled to enforce this Guarantee against the Bank as a principal debtor, in the first instance without proceeding against the Contractor and notwithstanding any security or other guarantee that DGPC may have in relation to the Contractor's liabilities.

Notwithstanding anything contained hereinabove our liability under this guarantee is limited to …….*[insert currency and amount of the advance]*……. and it shall remain in force up to and including …… and

Projects & Contract Department DGPC BHUTAN Contracts Section

shall be extended from time to time for such period as may be desired by M/s …… on whose behalf this guarantee has been given.

All rights of DGPC under this guarantee shall be forfeited and the Bank shall be relieved and discharged from all liabilities after the above-mentioned date or from the extended date.

Dated this ……day of …….20 …… at …….

Witness:

……	……
(Signature)	(Signature)
……	……
(Name)	(Name)
……	……
(Official Address)	(Official Address)

Attorney as per

Power of Attorney No: …….

Date…….

Form 22A: Deed of hypothecation for secured advances – Contractor's plant and equipment – Not Applicable

Date: ……
Contract No.: ……

This indenture made on ...*[insert date]*.... by .....*[insert name of Contractor]*..... under the laws of ....*[insert name of country of Contractor]*....., having its principal place of business located at .....*[insert address]*..... (hereinafter referred to as the Contractor which expression shall where the context permits or implies be deemed to include his executors, administrators and or assigns) in favour of Druk Green Power Corporation Limited having its office at .....*[insert address of DGPC]*..... (hereinafter called DGPC which expression shall where the context permits or implies be deemed to include its successors or assigns).

WHEREAS the Contractor has been awarded the work of .....*[insert name of Works and Letter of Award reference]*.Vide letter of award no. ... dated ....*[insert date]*...., which has been unequivocally accepted by the Contractor.

WHEREAS the Contractor has applied to DGPC in terms of clause GCC.13.2.1 relating to the above referred LoA that he may be allowed an advance on the security of the plant and equipment absolutely belonging to him and brought by him to the Site of the Works.

WHEREAS the said plant and equipment are exclusively brought by the Contractor for use in the construction of the Works as mentioned in the LoA and the Bill of Quantities of the Contract, for the next six (6) months requirements from the date hereof.

WHEREAS the Contractor has undertaken to complete the Works using the plant and equipment vide the said item reference for the rates mentioned in the Bill of Quantities of the Contract.

WHEREAS DGPC has agreed to for the payment to the Contractor the sum of.....*[insert currency and sum in figure and words]*..... only on the security of the plant and equipment which are detailed in the secured advance bill no.....*[insert bill reference]*..... dated .....*[insert date]*..... for the said work signed by the Contractor.

NOW THIS INDENTURE witnessed in pursuance of the said consideration of the sum of .....*[insert currency and sum in figure and words]*..... only paid on execution of these presents to the Contractor by DGPC (the receipt of which the Contractor hereby acknowledges) as under:

That the said sum of ....*[insert currency and sum in figure and words]*..... only as paid for plant and equipment by DGPC to the Contractor as aforesaid shall be employed by the Contractor in and for the execution of the said Works and for no other purpose whatsoever.

That all the plant and equipment detailed in the said bill which have been offered and accepted by DGPC as security are absolutely the Contractor's property and are free from encumbrances of any kind and the Contractor shall indemnify DGPC against all claims in respect of which the credit has been made to him as aforesaid.

That the plant and equipment detailed in the said bill on the security of which the payment has been made by DGPC shall be used by the Contractor solely in the execution of the said Works in accordance with the direction of DGPC and in the terms of the said Contract.

That the Contractor will make at his own cost all necessary arrangements for the proper watch and safe custody and protection against all risks of the said plant and equipment which shall remain at the Site of the said Works in the Contractor's custody and his own responsibility and shall at all times be open to the inspection by DGPC or any officer authorized by him. In the event of the said plant and equipment or any part thereof being stolen, destroyed, or damaged or becoming deteriorated in greater degree than due to reasonable use and wear thereof, the Contractor will forthwith replace the same with other plant and equipment of the like quality or repair and make good the same as required by DGPC.

That the plant and equipment detailed shall not on any account be removed from the Site of the said Works except with written permission of DGPC or any officer authorized by him on that behalf.



That the payment for the plant and equipment at Site shall be repayable in full as and when the Contractor receives payment from DGPC of the prices payable to him for the said Works under the provisions of the said Contract. Provided that if any intermediate payments are made to the Contractor on account of the work done, then on the occasion of each payment,DGPC will be at liberty to make recovery from the Contractor's bill for such payments by deducting there from the value of the said plant and equipment actually used in the construction in such a manner that by the time eighty percent (80%) work is complete, the total amount of advance is recovered from the Contractor.

That if the Contractor shall at any time during the execution of the Works, make any default in the performance or observation of any provision of the said Contract or these presents and if the advance may remain unadjusted or un-recovered, then the entire balance amount of the advance together with interest thereon at ....*[insert rate of interest]*.... from the date of default will become payable by the Contractor to DGPC with all costs, charges, damages and expenses incurred by DGPC in or for the recovery thereof of the enforcement of this security or otherwise by covenants and agrees with DGPC to repay and pay the same respectively to him.

That the Contractor hereby creates charge and lien in favour of DGPC on all the said plant and equipment for the repayments to DGPC of the said sum of ....*[insert currency and sum in figure and words]*.... only advanced as aforesaid and all costs, charges, damages, and expenses payable under this agreement provided always and it is hereby agreed and declared that notwithstanding anything in the said Contract and without prejudice to the power contained in the said Contract if and when the covenants for payments and repayment herein before contained shall become enforceable and money owing shall not be paid in accordance therewith, DGPC may at any time and thereafter adopt all or any of the following courses as he may deem fit:

- Seize and utilize the plant and equipment or any part thereof in the completion of the said Works on behalf of the Contractor in accordance with the provisions in that behalf contained in the Contract debiting the Contractor with the actual cost of effecting such completion and crediting the Contractor with the value of work done as per Contract at the rate thereby provided, if after affecting the aforesaid adjustment, any amount is outstanding against the Contractor, he has to pay the same to DGPC on demand.

- Remove/and/or sell by public auction, the seized plant and equipment or any part thereof and out of the monies arising from the sale retain all sums aforesaid repayable to DGPC under these presents and pay over the surplus, if any to the Contractor.

- Deducting all or any part of the money owing out of the contract performance security or any sum due to the Contractor under the said Contract.

That except in the event of such default on the part of the Contractor as aforesaid interest in the said advance shall not be payable.

That in the event of any conflict between the provisions of these presents and the said Contract, the provisions of these presents shall prevail and in the event of any dispute or difference arising over the construction or effects on these presents, the settlement of which has not herein before expressly provided for, the same shall be referred to the .....*[insert name of authority]*..... whose decision shall be final and binding.

Signed, Sealed and delivered by the contractor in the presence of:

Witnesses

Contractor

1.

2.

DGPC

1.

2.

(Seal and designation of persons signing)



Form 22B: Deed of hypothecation for secured advances – Construction Materials (Not Applicable)

Date: ……
Contract No.: ……

This indenture made on ...*[insert date]*.... by .....*[insert name of Contractor]*..... under the laws of ....*[insert name of country of Contractor]*....., having its principal place of business located at .....*[insert address]*..... (hereinafter referred to as the Contractor which expression shall where the context permits or implies be deemed to include his executors, administrators and or assigns) in favour of Druk Green Power Corporation Limited having its office at .....*[insert address of DGPC]*..... (hereinafter called DGPC which expression shall where the context permits or implies be deemed to include its successors or assigns).

WHEREAS the Contractor has been awarded the work of .....*[insert name of Works and Letter of Award reference]*.Vide letter of Award No.... dated ....*[insert date]*...., which has been unequivocally accepted by the Contractor.

WHEREAS the Contractor has applied to DGPC in terms of clause GCC.13.2.2 relating to the above referred LoA that he may be allowed an advance on the security of the construction materialsabsolutely belonging to him and brought by him to the Site of the Works.

WHEREAS the said materials are exclusively brought by the Contractor for use in the construction of the Works as mentioned in the LoA and the Bill of Quantities of the Contract, for the next six (6) months requirements from the date hereof.

WHEREAS the Contractor has undertaken to complete the Works using the materials vide the item reference nos.----------(*insert the item reference no of the BOQ)* for the rates (including the cost of materials to be incorporated) mentioned in the Bill of Quantities of the Contract.

WHEREAS DGPC has agreed to for the payment to the Contractor the sum of .....*[insert currency and sum in figure and words]*..... only on the security of the materials which are detailed in the secured advance bill no. ....*[insert bill reference]*..... dated .....*[insert date]*..... for the said work signed by the Contractor.

NOW THIS INDENTURE witnessed in pursuance of the said consideration of the sum of .....*[insert currency and sum in figure and words]*..... only paid on execution of these presents to the Contractor by DGPC (the receipt of which the Contractor hereby acknowledges) as under:

That the said sum of ....*[insert currency and sum in figure and words]*..... only as paid for materials by DGPC to the Contractor as aforesaid shall be employed by the Contractor in and for the execution of the said Works and for no other purpose whatsoever.

That all the materials detailed in the said bill which have been offered and accepted by DGPC as security are absolutely the Contractor's property and are free from encumbrances of any kind and the Contractor shall indemnify DGPC against all claims to any materials in respect of which the credit has been made to him as aforesaid.

That the materialsdetailed in the said bill on the security of which the payment has been made by DGPC shall be used by the Contractor solely in the execution of the said Works in accordance with the direction of DGPC and in the terms of the said Contract.

That the Contractor will make at his own cost all necessary arrangements for the proper watch and safe custody and protection against all risks of the said materials which shall remain at the Site of the said Works in the Contractor's custody and his own responsibility and shall at all times be open to the inspection by DGPC or any officer authorized by him. In the event of the said materials or any part thereof being stolen, destroyed, or damaged or becoming deteriorated in greater degree than due to reasonable use and wear thereof, the Contractor will forthwith replace the same with other materials of the like quality or repair and make good the same as required by DGPC.

That the materials detailed shall not on any account be removed from the Site of the said Works except with written permission of DGPC or any officer authorized by him on that behalf.



That the payment for the materials at Site shall be repayable in full as and when the Contractor receives payment from DGPC of the prices payable to him for the said Works under the provisions of the said Contract. Provided that if any intermediate payments are made to the Contractor on account of the work done, then on the occasion of each payment, DGPC will be at liberty to make recovery from the Contractor's bill for such payments by deducting there from the value of the said materials actually used in the construction in such a manner that by the time eighty percent (80%) work is complete, the total amount of advance is recovered from the Contractor.

That if the Contractor shall at any time during the execution of the Works, make any default in the performance or observation of any provision of the said Contract or these presents and if the advance may remain unadjusted or un-recovered, then the entire balance amount of the advance together with interest thereon at ....*[insert rate of interest]*.... from the date of default will become payable by the Contractor to DGPC with all costs, charges, damages and expenses incurred by DGPC in or for the recovery thereof of the enforcement of this security or otherwise by covenants and agrees with DGPC to repay and pay the same respectively to him.

That the Contractor hereby creates charge and lien in favour of DGPCon all the said materials for the repayments to DGPC of the said sum of ....*[insert currency and sum in figure and words]*.... only advanced as aforesaid and all costs, charges, damages, and expenses payable under this agreement provided always and it is hereby agreed and declared that notwithstanding anything in the said Contract and without prejudice to the power contained in the said Contract if and when the covenants for payments and repayment herein before contained shall become enforceable and money owing shall not be paid in accordance therewith, DGPC may at any time and thereafter adopt all or any of the following courses as he may deem fit:

- Seize and utilize the materials or any part thereof in the completion of the said Works on behalf of the Contractor in accordance with the provisions in that behalf contained in the Contract debiting the Contractor with the actual cost of effecting such completion and crediting the Contractor with the value of work done as per Contract at the rate thereby provided, if after affecting the aforesaid adjustment, any amount is outstanding against the Contractor, he has to pay the same to DGPC on demand.

- Remove/and/or sell by public auction, the seized materials or any part thereof and out of the monies arising from the sale retain all sums aforesaid repayable to DGPC under these presents and pay over the surplus, if any to the Contractor.

- Deducting all or any part of the money owing out of the contract performance security or any sum due to the Contractor under the said Contract.

That except in the event of such default on the part of the Contractor as aforesaid interest in the said advance shall not be payable.

That in the event of any conflict between the provisions of these presents and the said Contract, the provisions of these presents shall prevail and in the event of any dispute or difference arising over the construction or effects on these presents, the settlement of which has not herein before expressly provided for, the same shall be referred to the .....*[insert name of authority]*..... whose decision shall be final and binding.

Signed, Sealed and delivered by the contractor in the presence of:

Witnesses

Contractor

1.

2.

DGPC

1.

2.

(Seal and designation of persons signing)



Form 23: Validity extension of Bank Guarantee

Bank Guarantee No. .....

Date.....

To
[DGPC's Address]

Dear Sir/Madam,

Sub: Validity Extension of Bank Guarantee No. ..... dtd..... for .....*[insert currency and amount of the Bank Guarantee]*..... favouring yourselves, expiring on..... on account of M/s*..... in respect of Contract for procurement of.....*(insert name of the Works)*..... for ..... Contract No. ..... dated..... (hereinafter called original Bank Guarantee).

At the request of M/s*..... we ..... Bank having branch office at ..... and having Head Office at ..... do hereby extend our liability under the above mentioned Bank Guarantee No..... dtd ..... for a further period of.....Years/ Months from ..... to expire on .....

Except as provided above, all other terms and conditions of the original Bank Guarantee No..... dtd..... shall remain unaltered and binding on us.

Please treat this as an integral part of the original guarantee to which it would be attached.

Yours Faithfully,

(Signature)……..

(Name & Designation)……..

(Bank's Seal)……..

Authorized vide Power of Attorney No

……..

** In case of Joint Ventures, name of all partners of the Joint Venture shall be mentioned.*

Note: *The extension of the Bank Guarantee should be forwarded to the Plant/Department/Corporate Office, from where the extension has been sought.*

Projects & Contract Department
DGPC
BHUTAN
Contracts Section

SECTION VIII – PERFORMANCE EVALUATION SYSTEM



SECTION VIII – PERFORMANCE EVALUATION SYSTEM

1. INTRODUCTION

A contractor performance evaluation is a standardized, systematic and objective assessment of a contractor's performance on a specific project contract. This enables DGPC to judge whether the contractor has performed the work to a high standard on a number of fronts, and whether it is worth engaging them for future projects.

The performance evaluation criteria shall be used by each Project Manager/Site Engineer immediately with the commissioning of any work or services after the award of contract. The contractors shall be evaluated as the work progresses.

2. OBJECTIVES

The main objectives of the performance evaluation of Contractors for works are as follows:

- To adopt a more holistic approach in reviewing overall performance of Contractor;
- To work with Contractor to raise safety and quality standards;
- To encourage an environment of continuous improvement by Contractor;
- To build partnership with Contractor in specific and strategic areas; and
- To have a list of preferred Contractor to be selected for limited bidding process

3. PERFORMANCE EVAULATION SYSTEM (PES)

The assessment of the Contractors shall be done as follows:

SN	Particulars	Score
3.1	Pre-construction	**10%**
3.2	Construction	**80%**
3.2.1	Administration	30%
3.2.2	Safety	10%
3.2.2	Quality	40%
3.3	Completion Time	**10%**
Total		**100%**

3.1 Pre-construction (10%)

SN	Particulars	Score	Key performance measurement	Remarks
3.1.1	Work Schedule	2%	On time submission =100% or else 0%	Reference to be taken from the kick off meeting, which must be held before the start of the work.
3.1.2	Method Statement/ Methodology	2%	Submitted on time and agreeable =100% After 1st revision= 80% After 2nd revision= 50% After 3rd revision= 0%	As submitted along with the bid. Revision would mean, the methodology submitted does not suffice the requirement.
3.1.3	Mobilization	2%	Early= 120% On time= 100% Late= 0%	

3.1.4	Quality Assurance Plan (QAP)	2%	Submitted on time and agreeable =100% After 1st revision= 80% After 2nd revision= 50% After 3rd revision= 0%	As submitted along with the bid.
3.1.5	Insurance certificate	2%	Submitted within 15 days of Contract Award= 100% Submitted along with 1st RA Bill =50%	Date to be considered from the signing of contract agreement

Construction (80%)

3.2.1. Administration (30%)

SN	Particulars	Score	Key performance measurement	Remarks
3.2.1.1	Timely commencement	5%	• Early= 120% • On time= 100% • Late= 0%	As per the contract Agreement
3.2.1.2	Deployment of manpower and machineries (as per contract)	2%	• Deployed as per schedule= 100% • Not as per schedule= 0%	Reference to be considered from the Contract Agreement
3.2.1.3	Deployment of additional manpower and equipment for specific activities	5%	• As per schedule = 100% • 80% deployment = 80% • 50% deployment = 50% • Below 50% deployment = 0%	• Based on work schedule / Works Program • Determined by implementing agency. • Based on monthly reports
3.2.1.4	Key construction materials arrangement	5%	Adequate and timely = 100% or else 0%	Based on the Review report and agreed by both the parties.
3.2.1.5	Joint measurement	2%	Full attendance of contractor's representative =100% or else 0%	Based on the written request made by the Project Manager/Site Engineer considering the convenient time of both the parties.
3.2.1.6	Accuracy of running bills	3%	Accurate=100% Good (has few errors)= 60% Poor (frequently misrepresents the actual work and has multiple errors)= 0%	Accuracy of the bills submitted by the Contractor shall be assessed.
3.2.1.7	Timely Progress Report submission	2%	✓ 80% and above compliance = 100% ✓ Above 50% and up to 80% = 50% ✓ Below 50% = 0%	Reference to be taken from Kick off meeting.
3.2.1.8	Cooperation and Coordination with Employer	2%	✓ Excellent (proactive and prompt)=100%	To be rated on the promptness of the Contractor on resolution

Projects & Contract Department DGPC BHUTAN Contracts Section

SN	Particulars	Score	Key performance measurement	Remarks
			✓ Good (needs to be prompted by the client)= 80% ✓ Poor=0%	of any issue and on following the guidelines set in the Contract Document. Also on the communication, returning of phone calls or replying of emails.
3.2.1.9	Meetings (Progress Review Meetings, Coordination Meetings, etc)	2%	Full attendance of contractor's representative = 100% or else 0%	Based on the written request made by the Project Manager/Site Engineer considering the convenient time of both the parties.
3.2.1.10	Payment to labour, sub-contractors and suppliers	2%	✓ Less than 3 written complains = 100% ✓ Above 3 written complaints = 0%	Based on the written complaints by labour or sub-contractors or suppliers

3.2.2 Safety (10%)

SN	Particulars	Score	Key performance measurement	Remarks
3.2.2.1	Site Safety management (Signage/Barriers/ housekeeping/PPE/ others*)	4%	✓ 100% compliance = 100% ✓ 80% compliance = 50% ✓ Less than 80% = 0%	The Safety requirement to be specified in the Kick off meeting and according make the assessment based on the same.
3.2.2.2	Safety awareness and orientation	2%	✓ Monthly = 100% ✓ Quarterly = 50%	Assessment to be made based on the attendance sheet and report submitted by designated Safety Officer of contractor.
3.2.2.3	Safety Officer/Safety Supervisor	2%	✓ Appointed = 100% ✓ Not appointed = 0%	Designated safety officer need to be identified and mentioned in the kick off meeting.
3.2.2.4	Accident	2%	✓ Zero CDL = 100%. ✓ Up to 2 incidences = 80% ✓ More than 2 incidences = 0%	Accident would mean an accident that would result in absence from the work.

Note- *Separate list would be prepared considering the risk and safety aspects of the work (based on the nature of work). The list to be finalized before the start of the work (during the kick off meeting) and it shall be inline with the safety requirements specified by MoLHR.

3.2.3 Quality (40%)



SN	Particulars	Score	Key performance measurement	Remarks
3.2.3.1	Compliance to Drawings/Specifications/ methodology	13%	✓ Strict adherence =100% ✓ With minor deviations= 80% ✓ Frequent non-compliance= 0%	✓Minor deviations would mean deviations which does not lead to major issues to the project. ✓Frequent non-compliance would mean non-compliance leading to delays.
3.2.3.2	Inspections	5%	✓ 80% compliance = 100% ✓ Below 80% compliance = 0%	To be measured based on written request (adequate inspection time to be provided and full attendance of contractor's representative).
3.2.3.3	Implementation of QAP (Test reports to be submitted, where necessary)	12%	✓ Implementation (60%) = 100% or else 0% ✓ Test reports submission (40%) = 100% or else 0%	
3.2.3.4	Response to Non-compliance, Complaints and Notices	5%	✓ 100% response = 100% ✓ 80% response = 80% ✓ Less than 80% response = 0%	Calculation will be based on the number of requests made by the Project Manager/Project Engineer.
3.2.3.5	Documentation	5%	✓ Outstanding=100% ✓ Marginal (omissions of submittals resulting in errors and leading to revision of the schedule) =50% ✓ Unsatisfactory = 0%	The documentation to be submitted by the contractor based on the schedule and as agreed during the kick off time.

Completion Time (10%)

SN	Particulars	Score
3.3.1	Completion	Early=120% On time= 100%
3.3.2	Delay up to 20%	80%
3.3.3	Delay > 20%	0%

4. CONTRACTOR ASSESSMENT CATEGORY

The Contractors shall be categorized into three categories as under:

Category	Score	Remarks
A	80-100	Recommended/Preferred Contractors

Projects & Contract Department DGPC BHUTAN Contracts Section

B	50-79	✓ Contractors must be developed; ✓ Consider, but with mandatory debriefing on the short comings.
C	0-49	Contractors not qualified

5. EVALUATION PERIOD AND DEBARMENT

5.1. Evaluation period

The Performance evaluation shall be carried out after the commencement of any project till its closure.

5.2. Debarment of Contractors

Based on the assessment of contractors at the closure of each project, all non-performing Contractors shall be referred to the Debarment Committee as per the Debarment Rules 2019 of RGoB. The non-performing contractor falling under category B and C shall be subjected to referral to the Debarment Committee and the decision of the Committee shall be final and binding.

Projects & Contract Department
DGPC
BHUTAN
Contracts Section

ANNEXURE I: TERMS OF REFERENCE

Projects & Contract Department
DGPC
BHUTAN
Contracts Section

Annexure I



DRUK GREEN POWER CORPORATION LIMITED
Projects and Contract Department
Druk Green Consultancy
Thimphu; Bhutan

TERMS OF REFERENCE
FOR
TOPOGRAPHICAL SURVEY AND MAPPING
OF
MINJEY HYDROPOWER PROJECT
&
PHAWAN HYDROPOWER PROJECT
LHUENTSE DZONGKHAG

Table of Contents

1. Background 1
2. Objective of Survey 1
3. Scope of Work 1
4. Project Location 1
4.1 Control Survey 2
4.2 Topographical survey and mapping 4
5. River Survey 6
6. Requirement of Manpower and Equipment 7
6.1 Bidder Experience 7
6.2 List of Manpower 7
6.3 List of Equipment 7
7. Reports and Deliverables 8
8. Safety Measures and Risk Mitigation 9
8.1 Safety & Emergency Preparedness 9
8.2 Hazard Management, Public Safety & Waste Management 9
9. Contract Duration and Milestone 10
10. Payment 10
11. Bill of Quantities 11

List of Tables

Table 1: Location details & no. of permanent control points 3
Table 2: Components of Project 4
Table 3: Data Capture Specification using LiDAR Drone. 5
Table 4: River cross section details. 6
Table 5: List of manpower 7
Table 6: List of equipment 8
Table 7: Bill of Quantities 11

List of Figures

Figure 1: Minjey and Phawan Hydropower Projects location 2
Figure 2: Control Point Block Specification 4

1. Background

Druk Green Power Corporation Limited (DGPC) has been entrusted by the Royal Government of Bhutan to accelerate hydropower development with the aim to quadruple the installed capacity of Bhutan by 2040 due to exponential domestic demand increase in recent years. In view of this, Minjey and Phawan Hydropower Projects under Lhuentse Dzongkhag have been identified for DPR studies, both the projects are identified during formulation of the Power System Master Plan 2040 in 2019.

Both the projects are pondage-type schemes with diurnal storage located in eastern Bhutan in the Kurichhu basin in Lhuntse Dzongkhag. The Minjey project lies under Minjey Gewog with the dam site immediately accessible from the existing road. The Phawan project is located downstream with 0.5 km road extension required. For both projects, the Head Race Tunnel falls within Lhuentse Dzongkhag along the Kurichhu River, and the Powerhouse Complexes are located on the left bank of the river.

2. Objective of Survey

The topographical survey carried out during the Detailed Project Report (DPR) stage of the project shall be geared towards updating the detailed engineering site plans and sections of the project area. Topographical maps and sections shall be prepared in sufficient detail to establish a sound basis for planning, engineering and design of the project.

The objective also includes accurately reflecting the current ground reality with recent topographical features, developments and any changes within the specified area. In addition to identifying and mapping newly introduced features, the scope of work shall also involve the revalidation of existing topographical features.

3. Scope of Work

To attain the above objectives, the following scope of work for carrying out topographical survey shall be undertaken:

i. Control survey and establishment of control points.
ii. Topographical survey and mapping
iii. River survey

The scope, standard, procedures and accuracy requirements of these surveys are presented in the following sections.

4. Project Location

Minjey Hydropower Project

The Minjey Hydropower Project is located in eastern Bhutan within Lhuentse Dzongkhag, along the Kurichhu River. The proposed dam site is accessible from the existing road. The Head Race

Tunnel (HRT) lies predominantly within Lhuentse Dzongkhag, following the Kurichhu River. The Powerhouse Complex is proposed on the both the river bank of the Kurichhu River. Project development will require the relocation of an existing road section of approximately 5 km, including one bridge, and an additional road extension of approximately 0.5 km from the powerhouse site.

Phawan Hydropower Project

The Phawan Hydropower Project is located in eastern Bhutan within Lhuentse Dzongkhag, downstream of the proposed Minjey Hydropower Project site along the Kurichhu River. The proposed dam site is accessible from the existing road, with an additional road extension of approximately 0.5 km required. The Head Race Tunnel (HRT) lies entirely within Lhuentse Dzongkhag along the Kurichhu River. The Powerhouse Complexes are proposed on the left bank of the Kurichhu River, approximately 0.5 km from the existing road, requiring the development of an access road.



Figure 1: Minjey and Phawan Hydropower Projects location

4.1 Control Survey

Control survey shall be conducted in the project area to setup the basic framework for carrying out detailed topographical surveys for the proposed project. The control survey shall be tied to a minimum of two known permanent stations established by the National Land Commission Secretariat (NLCS) one first-order geodetic station for horizontal control and one benchmark for vertical control or alternatively, the Druk Continuously Operating Reference Stations (CORs) network, subject to verified connectivity strength

and signal reliability. Prior to commencing any survey work, the contractor shall validate all control stations and benchmarks for integrity, positional accuracy, and usability, and shall document baseline distances and connectivity strength where CORs are adopted. No survey observations shall be accepted unless the control framework is fully verified and approved before topographical survey and mapping works begin. The minimum of 3-6 hours observation of the control point in static mode shall be carried out with rover/receiver.

The new permanent control points need to be established at the project area with dimension of 30 cm x 30 cm x 50 cm with non-corrosive marker embedded in the concrete block. The control points shall be 20 cm above the surface of the ground with the name and elevation written on the control points. The control survey and establishment of new control points shall be start right after awarding the work. Additionally, temporary control points shall be established in the entire area at suitable interval on permanent structures using DGPS in static/RTK mode from the primary control points.

The accuracy requirement shall confirm to no less than:

a) Horizontal accuracy: ≤ 2 cm at 95% confidence level.
b) Vertical accuracy: ≤ 2.5 cm at 95% confidence level

Table 1: Location details & no. of permanent control points

Sl. No	Location	Minjey HPP
1	Dam and Desilting Chamber	2
2	Head Race Tunnel and Adit Portal	
3	Powerhouse complex, PS Adit and Surge Shaft	4 (2 each at right and left bank)

Sl. No	Location	Phawan HPP
1	Dam and Desilting Chamber	2
2	Head Race Tunnel and Adit Portal	2
3	Powerhouse complex, PS Adit and Surge Shaft	2

During the site visits, the condition and usefulness of the identified ground control points shall be established in close consultation with DGPC. Issues such as accessibility to proposed control points, inter-visibility, length of line of sight, ground cover, need for cutting and clearing of vegetation, etc. shall be jointly studied during the visits to confirm the proposed survey plans. The control points shall be set up on stable areas with permanent features so that no damage or displacement should occur in future. Further, the proper and detailed reference in narrative mode and coordinates in both UTM and Drukref 23 shall be provided for each of the established control points and two known benchmarks for ease of identification in future. The distance between the two control points of the project component shall be less than 300 m.

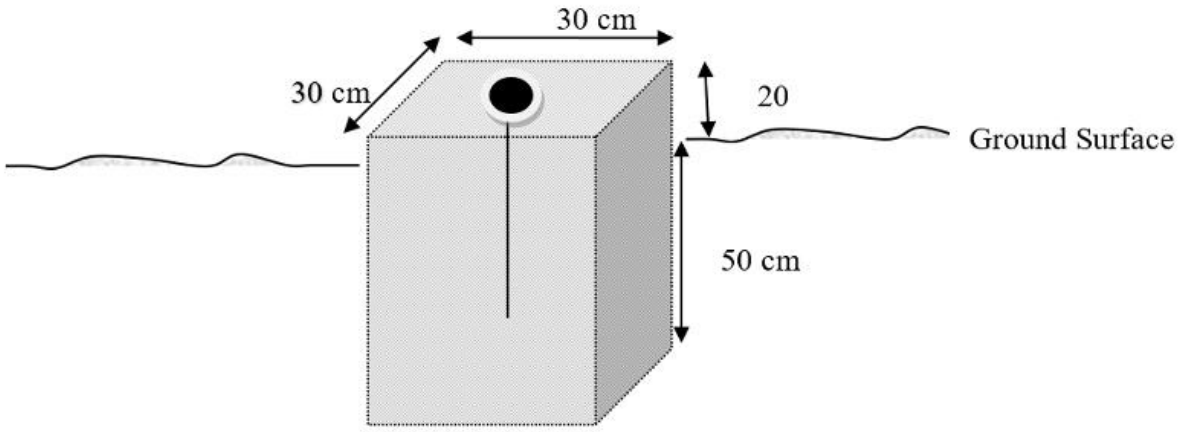

Figure 2: Control Point Block Specification

Each permanent benchmark and respective control points established in the project area should be documented, recording the coordinates and elevation, description and the scale factor of control points. Additionally, the elevation and the designated name of each GCP must be permanently inscribed on the control point itself.

4.2 Topographical survey and mapping

Topographical survey and mapping are important engineering work required for planning, engineering and design of the project. This survey shall result in preparation of detailed site maps for conceiving, justifying, designing and constructing the project. After field data have been reduced and compiled, the topographical maps shall be generated which should consist of the different layers for river, river banks, streams (should be clearly distinguished as perennial and non-perennial with local names), settlement, roads with classification, administrative boundaries, wet land and dry land, religious sites, cliff, landslides, marshy area, seepages, vegetation, transmission & distribution lines, substations, communication towers, major landmarks etc.

Topographical survey for the project as detailed in **Table *2*** below shall be carried out as per the scale and contour interval indicated:

Table 2: Components of Project

Component	Scale and contour interval	Area of Interest (km^2)	Remarks
Whole Project Area using the high resolution satellite image	Scale: 1:5,000 with CI: 5 m	55.519	
Dam Area	Scale: 1:1,000 with CI: 1 m	13.727	
Powerhouse, surge shaft, PS adit and portals	Scale: 1:1,000 with CI: 1 m	4.212	

Table 3: Data Capture Specification using LiDAR Drone.

Coverage	Appropriate flight plans should be prepared to achieve the desired point density. The defined survey area should be buffered by a minimum of 100 m.
GSD	<5 cm
Bands	R G B (Three band natural colour imagery)
Point Density	50 Points/sqm
End overlap	80% minimum
Side overlap	70% minimum
Collection condition	As pre following conditions:
	• Sun angle no less than 30 degrees to minimize shadow. • Areas having high relief changes, survey should be done at high sun angle to avoid shadows. • Cloud free with minimal smoke, smog, fog and dust. • Minimum soil moisture and after sufficient gap after rainfall. • Maximum effort should be made to avoid breaks within individual flight lines. Where necessary, the entire flight line composed of the resulting segments shall meet all the requirements set forth in these specifications. Where breaks occur, these shall have an overlap of at least four frames to ensure a stereo model of overlap or tie.
Image format	Uncompressed GeoTIFF
Imagery product	Seamless mosaic covering the project area and non-overlapping, edge-matched tiles.
Horizontal Accuracy	5cm GSD or better for the ortho-photo generated.
Vertical Accuracy	10cm or better.
Radiometric Resolution	Minimum 8 bit per band in accordance with chosen image format.
Horizontal Datum	The World Geodetic Datum 84 (WGS-84).
Map Projection	The coordinate system for all deliverables is both DrukRef23 and Universal Transverse Mercator (UTM 46N).
Geoid Model	EGM2008 shall be used to derive Orthometric heights from ellipsoidal data.

5. River Survey

The river survey shall consist of a longitudinal profile and cross-section of the river.

Table 4: River cross section details.

Component	Scale and Contour Interval (CI)
Longitudinal Profile	**Upstream** ● Extend from dam axis till maximum water level (MWL) + 5 m @ 100 m interval. **Downstream** ● Extend from the dam axis till 500 m downstream of TRT/PH axis @ 100 m interval The river center point of the cross section should be incorporated.
Cross section	**Dam** Upstream ● 125 m upstream from dam axis @ 25 m interval including axis ● 500m upstream from the dam axis @ 50 m interval after the section @ 25 m interval ● 2km upstream from the dam axis @ 200 m interval after the section @ 50 m interval river ● Corresponding to the length of L-section from the dam axis @ 500 m interval after the section @ 200 m interval river Downstream ● 125 m downstream from dam axis @ 25m interval. ● 500 m downstream from the dam axis @ 50m interval after the section @ 25m interval ● 2 km downstream from dam axis @ 200 m interval after the section @ 50 m interval ● Corresponding to the length of the L-section from the dam axis @ 500 m interval after the section @ 200 m interval **Tailrace Tunnel (TRT)** ● 500 m upstream and downstream from TRT outlet including TRT axis @ 50 m interval Cross-section shall be 10 m vertical elevation above HFL on either side of the river bank with 1 m interval in cross section. The section to be surveyed shall cover change of river width, turns of the river, rapids, top and below of the fall and 10 m interval along river at turns of the river and rapids

	The following items shall also be indicated in the Cross-Section: a) Date of survey of the particular reach and average water level on that day b) Deep pools and rapids, rock outcrops, etc. c) Maximum historical/observed water level On the cross-section, river center, riverbed level (mention right and left bank) and historical flood level shall be labeled.

6. Requirement of Manpower and Equipment

6.1 Bidder Experience

Experience of having successfully completed at least 1 (one) similar work during the last five (5) years. Bidder shall submit a copy of the work order & completion certificate.

6.2 List of Manpower

The following listed manpower with minimum experience as indicated shall be made available by the Contractor for the execution of the survey works at project. While the numbers provided are minimum requirement, the contractor shall deploy additional personnel at site for timely completion of work as given in the contract duration.

Table 5: List of manpower

Sl. No	Personnel	Number	Qualification and Experience
1	Drone Pilot	1	Should have drone license or flyer ID accepted by BCAA with minimum field experience of 3-5 years and with experience in drone image processing, GIS, Remote Sensing, Photogrammetry and the use of GNSS and all other surveying instruments.
2	Survey Engineer	1	Minimum qualification in BE Surveying and Geoinformatics (or equivalent) and minimum experience of 2-5 years in drone image processing, GIS, Remote Sensing, Photogrammetry and the use of GNSS and all other surveying instruments.
3	Surveyor	1	Minimum qualification of Diploma in Survey and experience of 2-5 years in the use of GNSS and all other surveying instruments.

6.3 List of Equipment

The minimum amount of equipment that will be required for the work is listed below:

Table 6: List of equipment

Sl. No	Equipment	Number	Remarks
1	LiDAR Drone	1 set	The drone should have RTK integration and be suitable for conducting topographic surveys and mapping of the whole project layout using LiDAR sensor.
2	GNSS RTK	2 set	High-accuracy multi-frequency GNSS RTK system (1 Base + 2 Rovers) for Control Survey & Establishment of Permanent Control Points (as per DGPC requirement in BOQ), topographic survey of Dam Area, Powerhouse, Surge Shaft & TRT and supporting LiDAR ground control.
3	ADCP/bathymetry equipment	1 set	High-accuracy Echo Sounder equipment for Longitudinal Profile (L-Section) and River Cross-Sections (X-Sections). The system must provide centimeter-level accuracy in river bathymetric survey.

7. Reports and Deliverables

Upon completion of the survey work for each project, a survey report containing, among others, the following shall be prepared by the Contractor and made available to the DGPC:

I. Topographical Survey and Mapping Report (PDF and Editable format)

a. Methodology of survey and drone image/data processing
b. Instruments used
c. Complete list of ground control points (GCPs) and Temporary Bench Marks (TBMs) with description and photographs.
d. Accuracy of survey and quality control checks.
e. Results and interpretation.
f. Software generated reports to be attached as annexure.

II. Outputs:

a. Contour data of 1 meter interval in shapefile and AutoCAD format with proper labels.
b. Integrated Contour data of 1 meter and 5-meter interval in shapefile and AutoCAD format with proper labels.
c. Digital Elevation Model (DEM), DTM, DSM at 50 cm resolution in GeoTIFF raster grid format with defined coordinate reference system.
d. Georeferenced Orthomosaic in GeoTIFF raster grid format.

e. LiDAR (LDR) files (Raw point clouds).
f. Classified Point Cloud data into different categories in LAZ/LAS format.
g. 3D Mesh/3D Model of Nadir-based photogrammetric model in .OBJ format (Agisoft Metashape compatible format).
h. Drone images and panoramic view images (RGB Imagery).
i. Digital topographic maps with all features in shapefile (.shp format) such as National Highway/Gewog road/farm road & Road Networks, bridges(motorable and pedestrian) Kilometer stones, Dzongkhag/Gewog Boundaries, Monuments, Park Area, Protected area, land use, settlement, rock exposures, rock outcrops, landslide, cliff, marshy area, Agricultural Land, Power lines, Foot path, Perennial & seasonal streams with local names, settlement annotation, Lhakhang, chorten, mobile towers, private properties, transmission/distribution lines, spot level and any other geological features (Boulders and Outcrop boundary).

A DGPC official shall be attached with the Contractor during the field data collection, data processing, and topographical data validation activities. Any changes or additional work requirements arising thereof shall be communicated to the Contractor in due course.

The Contractor shall submit required number of copies (both hard and soft) of the draft report (1 copy). All soft copy reports should include both PDF and editable word format. The comments, views and suggestions on the draft report shall be furnished within a week for necessary incorporation and finalization by the Contractor. The Contractor shall provide one (1) editable soft copy and one (1) hard copy of the final versions of the report. Soft copy of the topographical maps shall be in AutoCAD format and ArcGIS (both in Drukref 23 and UTM46N). The Contractor shall rectify the maps and reports if any correction/modifications arise even after completion of the work.

8. Safety Measures and Risk Mitigation

8.1 Safety & Emergency Preparedness

The survey consultant must enforce all safety measures and ensure all staff always wear full PPE. For river surveys, a pre-work risk assessment must be conducted, life jackets worn near water, solo work avoided, and non-slip wading boots used. Staff must monitor hypothermia and rising water levels. First-aid kits must be on-site, emergency procedures must be in place, and all accidents reported immediately to the project authority. The Contractor shall maintain an accurate record of and shall report to the Client and to the Government authorities all the cases of death, occupational diseases, or disabling injuries to his personnel that occurred in the performance of their duties or anywhere in the course of their employment for the works. However, the contractor shall be liable for any causalities occurred throughout the duration of work.

8.2 Hazard Management, Public Safety & Waste Management

Before commencing work, all potential hazards including difficult terrain, landslides, flooding, and traffic risks must be identified and mitigated. Survey activities must not disrupt public access, and warning signs must be placed near public areas. All waste must be properly segregated and disposed

of responsibly, with no waste left on-site, and hazardous materials handled in compliance with environmental regulations.

9. Contract Duration and Milestone

The overall duration for the completion of survey works for all projects shall be 60 days from the commencement date which shall be reckoned from the date of signing of LoA.

The submission of Topographical maps and report for the project shall be as follows:

i. Topographical map of scale 1:1000/1:5,000 with 1 m/5m contour interval shall be submitted by 30 days from the date of issuance of LoA.
ii. Final draft report shall be submitted by 45 days from the date of issuance of LoA.
iii. Final report shall be submitted by 60 days from the date of issuance of LoA.

10. Payment

The payment shall be based on the following milestones:

a. Ten (10 %) of the contract amount shall be paid as mobilization advance against the submission of unconditional Bank Guarantee/demand draft/cash warrant.
b. Seventy (70%) against the completion of each BoQ item after completing and submitting it to DGPC.
c. Fifteen (15%) against the submission of the Draft Report for each project.
d. Remaining Fifteen (15%) of the contract amount shall be released after the Consultant has submitted the Final Report incorporating all revisions and recommendations as specified in the validation report provided by DGPC and DGPC has issued its written acceptance/approval of the Final Report as complete and satisfactory.

11. Bill of Quantities

Table 7: Bill of Quantities

Sl. No	Items	Description	Unit	Quantity	Rate (Nu)	Amount (Nu)
1	Control Survey & Establishment of Permanent Control Points	Dimension: 30 cm x 30 cm x 70 cm	Nos.	12		
2	Topographical Survey and Mapping for whole project layout using LiDAR Drone & High-Resolution Satellite Image	Scale: 1:5,000 CI: 5 m	km^2	55.519		
3	Topographical survey and mapping of Dam area	Scale: 1:1000 CI:1 m	km^2	13.727		
4	Topographical survey and mapping of Powerhouse (Minjey SPH & UGPH and Phawan UGPH)	Scale: 1:1000 CI:1 m	km^2	4.212		
5	Longitudinal Profile	Horizontal 1:10,000 Vertical 1:100	Nos	457		
6	River Cross-sections	Horizontal 1:10,000 Vertical 1:100	Nos	239		
7	**Total**					
8	**GST (5%)**					
9	**Grand Total**					

Amount in Figure:

Amount in words: